Seal Data Sheets

TOP OSA

TIIVISTÄVÄ TEKIJÄ

Wipers
Rod Seals
Piston Seals
Rotary Seals
Guide Elements
Backup Elements

TOP OSA

TIIVISTÄVÄ TEKIJÄ

Wipers

Wipers

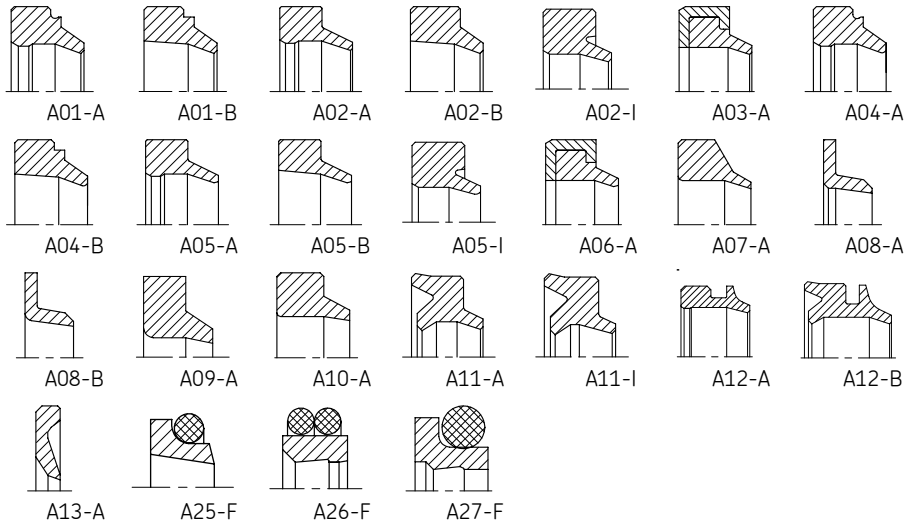
A01-A
A01-B
A02-A
A02-B
A02-I
A03-A
A04-A
A04-B
A05-A
A05-B
A05-I
A06-A
A07-A
A08-A
A08-B
A09-A
A10-A
A11-A
A11-I
A12-A
A12-B
A13-A
A25-F
A26-F
A27-F

Seal data sheet

Wipers

A01-A

Seal housing

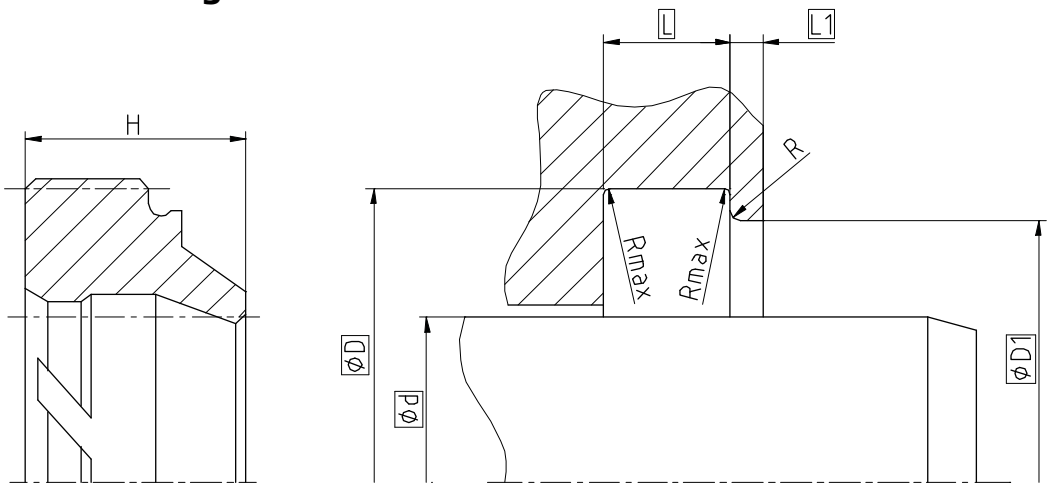

Surface roughness	Rtmax	Ra
Sliding Surface	≤ 2,5 µm	0,1...0,5 µm
Bottom of groove	≤ 6,3 µm	≤ 1,6 µm
Groove face	≤ 15 µm	≤ 3 µm

Ordering dimensions...☐

Bearing area: 50...95% and a cutting depth of 0,5xRz based on Cref = 0%

Standard dimensions

Ød f8	**ØD** H11	**ØD1** H11	**L** +0,2	**L1**	**Rmax**	**R**	**H**
≥ 11 ... ≤ 100	d + 8	d + 6	4	1	0,4	≤ 0,4	7
> 100 ... < 150	d + 12	d + 9	5,5	1,5			10
≥ 150	d + 15	d + 11	6,5	2			13

Operating parameters

Sealing material	Temperature	max. speed
ECOPUR®	**-30 °C...+110 °C**	**4 m/s**
H-ECOPUR™	-20 °C...+110 °C	
S-ECOPUR™	-20 °C...+110 °C	5 m/s
T-ECOPUR™	-50 °C...+110 °C	4 m/s
G-ECOPUR™	-30 °C...+110 °C	
X-ECOPUR™	-30 °C...+110 °C	4 m/s
XH-ECOPUR™	-20 °C...+110 °C	
XS-ECOPUR™	-20 °C...+110 °C	5 m/s
G-ECOPUR 54D™	-30 °C...+110 °C	4 m/s
SKF ECORUBBER-1	-30 °C...+100 °C	4 m/s
SKF ECORUBBER-2	-20 °C...+200 °C	
SKF ECORUBBER-3	-50 °C...+150 °C	
SKF ECORUBBER-H	-25 °C...+150 °C	
SKF ECOFLAS	-10 °C...+200 °C	

The stated operation conditions represent general indications. It is recommended not to use all maximum values simultaneously. Surface speed limits apply only to the presence of adequate lubrication film.

Ordering example

A01-A, d=50mm, D=58mm, D1=56mm, L=4mm, L1=1mm, ECOPUR®

Wiper A01-A	**50 x 58/56 x 4/1**	**ECOPUR®**
Profile	d x D/D1 x L/L1	Sealing material

Seal data sheet

Wipers

A01-B

Seal housing

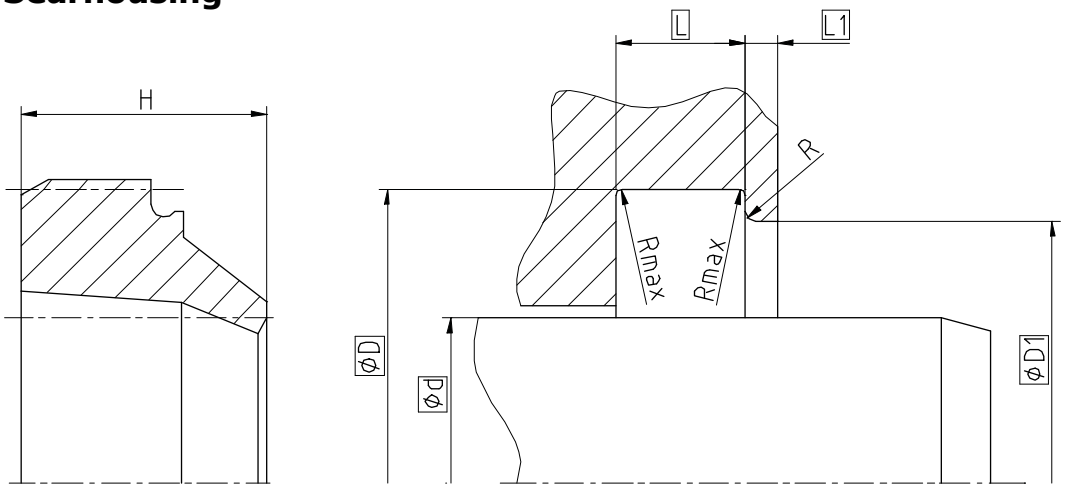

Surface roughness	Rtmax	Ra
Sliding Surface	≤ 2,5 µm	0,1...0,5 µm
Bottom of groove	≤ 6,3 µm	≤ 1,6 µm
Groove face	≤ 15 µm	≤ 3 µm

Ordering dimensions...☐

Bearing area: 50...95% and a cutting depth of 0,5xRz based on Cref = 0%

Standard dimensions

Ød f8	**ØD** H11	**ØD1** H11	**L** +0,2	**L1**	**Rmax**	**R**	H
≥ 5 ... ≤ 100	d + 8	d + 6	4	1	0,4	≤ 0,4	7
> 100 ... < 150	d + 12	d + 9	5,5	1,5			10
≥ 150 ... ≤ 600	d + 15	d + 11	6,5	2			13

Operating parameters

Sealing material	Temperature	max. speed
ECOPUR®	**-30 °C...+110 °C**	**4 m/s**
H-ECOPUR™	-20 °C...+110 °C	
S-ECOPUR™	-20 °C...+110 °C	5 m/s
T-ECOPUR™	-50 °C...+110 °C	4 m/s
X-ECOPUR™	-30 °C...+110 °C	4 m/s
XH-ECOPUR™	-20 °C...+110 °C	
XS-ECOPUR™	-20 °C...+110 °C	5 m/s
SKF ECORUBBER-1	-30 °C...+100 °C	4 m/s
SKF ECORUBBER-2	-20 °C...+200 °C	
SKF ECORUBBER-3	-50 °C...+150 °C	
SKF ECORUBBER-H	-25 °C...+150 °C	
SKF ECOFLAS	-10 °C...+200 °C	

The stated operation conditions represent general indications. It is recommended not to use all maximum values simultaneously. Surface speed limits apply only to the presence of adequate lubrication film.

Ordering example

A01-B, d=50mm, D=58mm, D1=56mm, L=4mm, L1=1mm, ECOPUR®

Wiper A01-B	**50 x 58/56 x 4/1**	**ECOPUR®**
Profile	d x D/D1 x L/L1	Sealing material

Seal data sheet

Wipers

A02-A

Seal housing

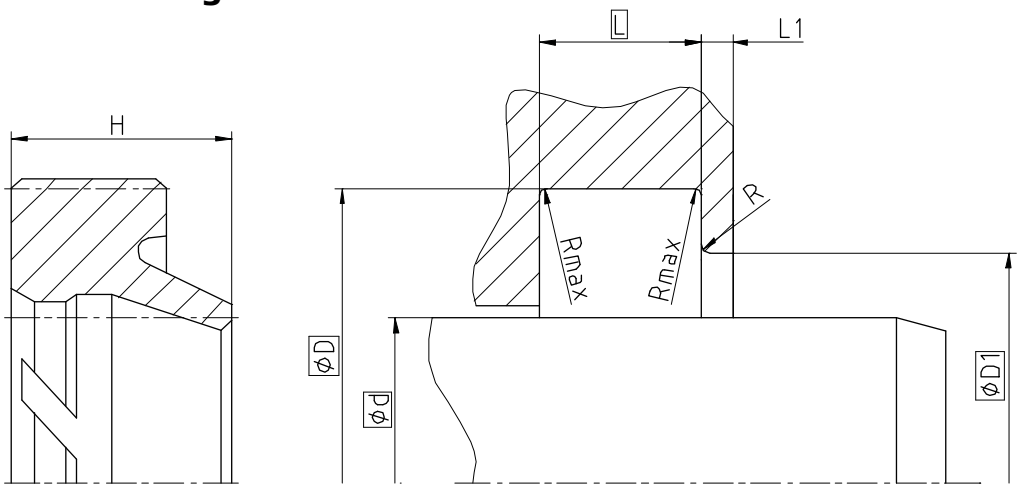

Surface roughness	Rtmax	Ra
Sliding Surface	≤ 2,5 µm	0,1...0,5 µm
Bottom of groove	≤ 6,3 µm	≤ 1,6 µm
Groove face	≤ 15 µm	≤ 3 µm

Ordering dimensions...☐

Bearing area: 50...95% and a cutting depth of 0,5xRz based on Cref = 0%

Standard dimensions

Ød f8	**ØD** H11	**ØD1** H11	**L** +0,2	**L1**	**Rmax**	**R**	H
≥ 11 ... ≤ 50	d + 8	d + 4	5	≥ 2	0,4	≤ 0,3	8
> 50 ... < 100	d + 10	d + 5	6				9,7
≥ 100	d + 15	d + 7,5	8,5				13

Operating parameters

Sealing material	Temperature	max. speed
ECOPUR®	**-30 °C...+110 °C**	**4 m/s**
H-ECOPUR™	-20 °C...+110 °C	
S-ECOPUR™	-20 °C...+110 °C	5 m/s
T-ECOPUR™	-50 °C...+110 °C	4 m/s
G-ECOPUR™	-30 °C...+110 °C	
X-ECOPUR™	-30 °C...+110 °C	4 m/s
XH-ECOPUR™	-20 °C...+110 °C	
XS-ECOPUR™	-20 °C...+110 °C	5 m/s
G-ECOPUR 54D™	-30 °C...+110 °C	4 m/s
SKF ECORUBBER-1	-30 °C...+100 °C	4 m/s
SKF ECORUBBER-2	-20 °C...+200 °C	
SKF ECORUBBER-3	-50 °C...+150 °C	
SKF ECORUBBER-H	-25 °C...+150 °C	
SKF ECOFLAS	-10 °C...+200 °C	

The stated operation conditions represent general indications. It is recommended not to use all maximum values simultaneously. Surface speed limits apply only to the presence of adequate lubrication film.

Ordering example

A02-A, d=50mm, D=58mm, D1=54mm, L=5mm, ECOPUR®

Wiper A02-A	**50 x 58/54 x 5**	**ECOPUR®**
Profile	d x D/D1 x L	Sealing material

Seal data sheet

Wipers

A02-B

Seal housing

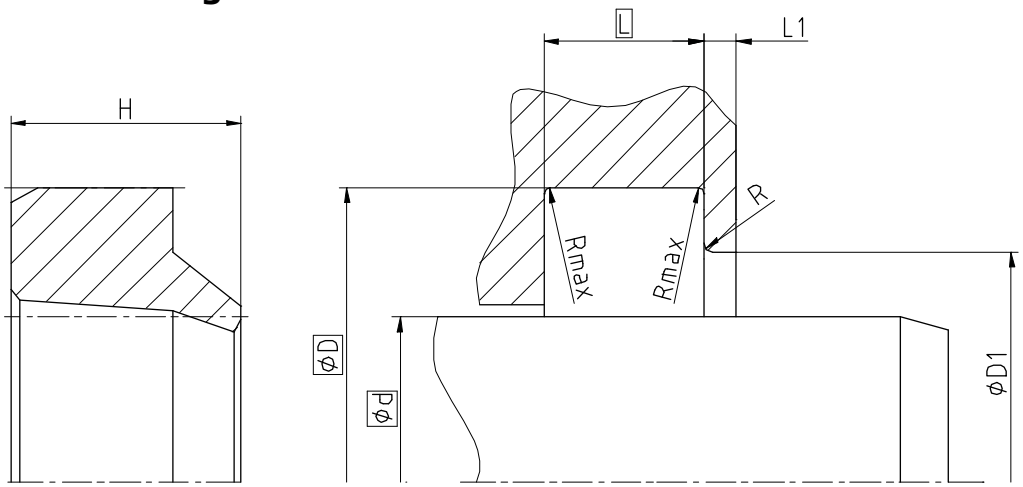

Surface roughness	Rtmax	Ra
Sliding Surface	≤ 2,5 µm	0,1...0,5 µm
Bottom of groove	≤ 6,3 µm	≤ 1,6 µm
Groove face	≤ 15 µm	≤ 3 µm

Ordering dimensions...☐

Bearing area: 50...95% and a cutting depth of 0,5xRz based on Cref = 0%

Standard dimensions

Ød f8	**ØD** H11	**ØD1** H11	**L** +0,2	**L1**	**Rmax**	**R**	**H**
≥ 5 ... ≤ 50	d + 8	d + 4	5	≥ 2	0,4	≤ 0,4	7,15
> 50 ... < 100	d + 10	d + 5	6				8,6
≥ 100	d + 15	d + 7,5	8,5				12,15

Operating parameters

Sealing material	Temperature	max. speed
ECOPUR®	**-30 °C...+110 °C**	**4 m/s**
H-ECOPUR™	-20 °C...+110 °C	
S-ECOPUR™	-20 °C...+110 °C	5 m/s
T-ECOPUR™	-50 °C...+110 °C	4 m/s
G-ECOPUR™	-30 °C...+110 °C	
X-ECOPUR™	-30 °C...+110 °C	4 m/s
XH-ECOPUR™	-20 °C...+110 °C	
XS-ECOPUR™	-20 °C...+110 °C	5 m/s
G-ECOPUR 54D™	-30 °C...+110 °C	4 m/s
SKF ECORUBBER-1	-30 °C...+100 °C	4 m/s
SKF ECORUBBER-2	-20 °C...+200 °C	
SKF ECORUBBER-3	-50 °C...+150 °C	
SKF ECORUBBER-H	-25 °C...+150 °C	
SKF ECOFLAS	-10 °C...+200 °C	

The stated operation conditions represent general indications. It is recommended not to use all maximum values simultaneously. Surface speed limits apply only to the presence of adequate lubrication film.

Ordering example

A02-B, d=50mm, D=58mm, L=5mm, ECOPUR®

Wiper A02-B
Profile

50 x 58 x 5
d x D x L

ECOPUR®
Sealing material

Seal data sheet

A02-I

Wipers

Seal housing

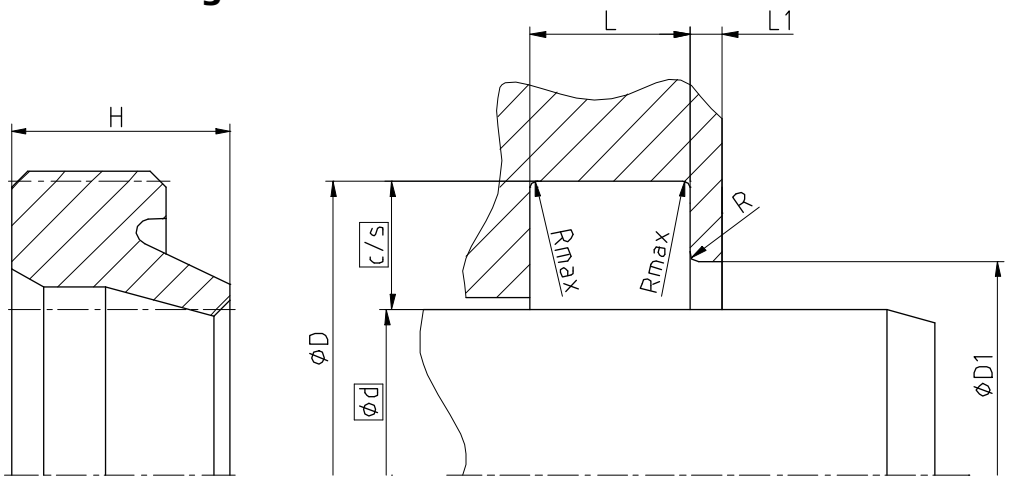

Surface roughness	Rtmax	Ra
Sliding Surface	≤ 2,5 µm	0,1...0,5 µm
Bottom of groove	≤ 6,3 µm	≤ 1,6 µm
Groove face	≤ 15 µm	≤ 3 µm

Ordering dimensions...☐

Bearing area: 50...95% and a cutting depth of 0,5xRz based on Cref = 0%

Standard dimensions

Ød f8	**c/s**	**ØD** H11	**ØD1** H11	**L** +0,2	**L1**	**Rmax**	**R**	**H**
≥ 5 ... ≤ 28	3	d + 6	d + 2,5	4	≥ 2	0,4	≤ 0,43	5,3
> 28 ... ≤ 56	4	d + 8	d + 3	5				7
> 56 ... ≤ 110	5	d + 10	d + 3	6				8
> 110	7,5	d + 15	d + 4	8,5			≤ 0,4	11

Operating parameters

Sealing material	Temperature	max. speed
ECOPUR®	**-30 °C...+110 °C**	**4 m/s**
H-ECOPUR™	-20 °C...+110 °C	
S-ECOPUR™	-20 °C...+110 °C	5 m/s
T-ECOPUR™	-50 °C...+110 °C	4 m/s
G-ECOPUR™	-30 °C...+110 °C	
X-ECOPUR™	-30 °C...+110 °C	4 m/s
XH-ECOPUR™	-20 °C...+110 °C	
XS-ECOPUR™	-20 °C...+110 °C	5 m/s
G-ECOPUR 54D™	-30 °C...+110 °C	4 m/s
SKF ECORUBBER-1	-30 °C...+100 °C	4 m/s
SKF ECORUBBER-2	-20 °C...+200 °C	
SKF ECORUBBER-3	-50 °C...+150 °C	
SKF ECORUBBER-H	-25 °C...+150 °C	
SKF ECOFLAS	-10 °C...+200 °C	

The stated operation conditions represent general indications. It is recommended not to use all maximum values simultaneously. Surface speed limits apply only to the presence of adequate lubrication film.

Ordering example

A02-I, d=50mm, c/s=4mm, ECOPUR®

Wiper A02-I	**50 x 4**	**ECOPUR®**
Profile	d x c/s	Sealing material

Seal data sheet

Wipers

A03-A

Seal housing

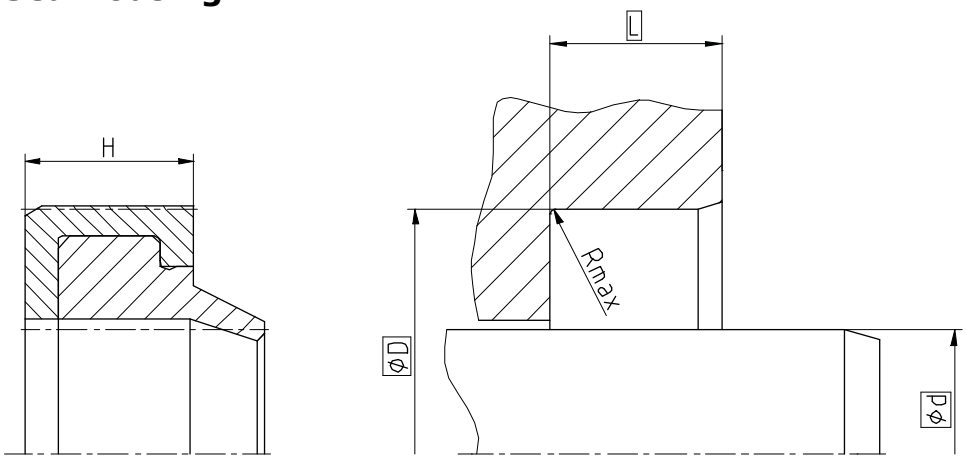

Surface roughness	Rtmax	Ra
Sliding Surface	≤ 2,5 µm	0,1...0,5 µm
Bottom of groove	≤ 6,3 µm	≤ 1,6 µm
Groove face	≤ 15 µm	≤ 3 µm

Ordering dimensions...☐

Bearing area: 50...95% and a cutting depth of 0,5xRz based on Cref = 0%

Standard dimensions

Ød f8			**ØD** H8	**L** +0,2	**Rmax**	**H**
≥ 22	...	< 100	d + 10	7	0,4	10
≥ 100	...	≤ 200	d + 15	9		12
> 200	...	≤ 600	d + 20	12		16

Operating parameters

Sealing material	Housing	Temperature	max. speed
ECOPUR®	**SKF ECOTAL** SKF ECOMID[1]	**-30 °C...+80 °C**	**4 m/s**
H-ECOPUR™		-20 °C...+80 °C	
S-ECOPUR™		-20 °C...+80 °C	5 m/s
T-ECOPUR™		-50 °C...+80 °C	4 m/s
X-ECOPUR™	SKF ECOTAL SKF ECOMID[1]	-30 °C...+80 °C	4 m/s
XH-ECOPUR™		-20 °C...+80 °C	
XS-ECOPUR™		-20 °C...+80 °C	5 m/s
SKF ECORUBBER-1	SKF ECOTAL SKF ECOMID[1]	-30 °C...+80 °C	4 m/s
SKF ECORUBBER-2	SKF ECOPAEK	-20 °C...+200 °C	
SKF ECORUBBER-3		-50 °C...+150 °C	
SKF ECORUBBER-H	SKF ECOTAL SKF ECOMID[1]	-25 °C...+80 °C	
SKF ECOFLAS	SKF ECOPAEK	-10 °C...+200 °C	

The stated operation conditions represent general indications. It is recommended not to use all maximum values simultaneously. Surface speed limits apply only to the presence of adequate lubrication film.

[1] ≤ Ø260mm: SKF ECOTAL ; > Ø260mm: SKF ECOMID

Ordering example

A03-A, d=50mm, D=60mm, L=7mm, ECOPUR® / SKF ECOTAL

Wiper A03-A	**50 x 60 x 7**	**ECOPUR® / SKF ECOTAL**
Profile	d x D x L	Sealing material / Housing

Seal data sheet

Wipers

A04-A

Seal housing

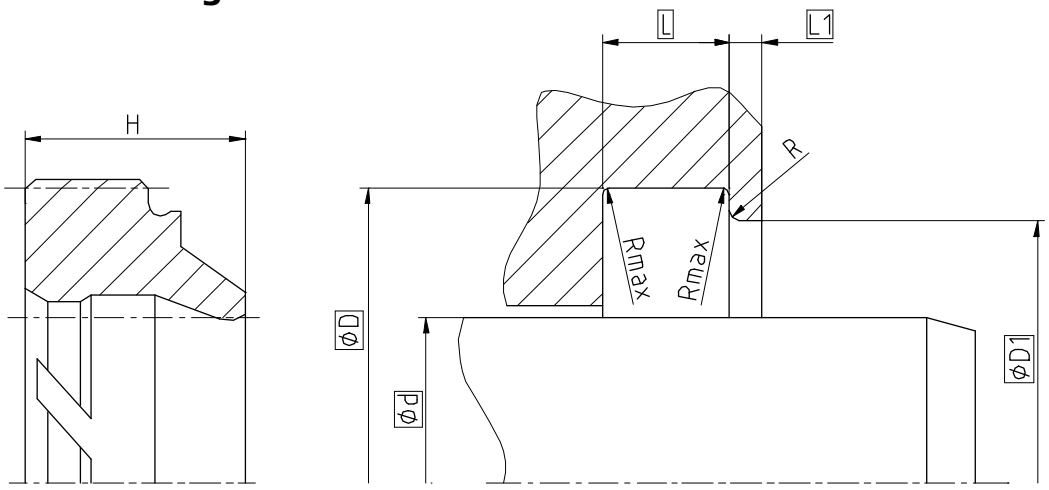

Surface roughness	Rtmax	Ra
Sliding Surface	≤ 2,5 µm	0,1...0,5 µm
Bottom of groove	≤ 6,3 µm	≤ 1,6 µm
Groove face	≤ 15 µm	≤ 3 µm

Ordering dimensions...☐

Bearing area: 50...95% and a cutting depth of 0,5xRz based on Cref = 0%

Standard dimensions

Ød f8	**ØD** H11	**ØD1** H11	**L** +0,2	**L1**	**Rmax**	**R**	**H**
≥ 11 ... ≤ 100	d + 8	d + 6	4	1	0,4	≤ 0,4	7
> 100 ... < 150	d + 12	d + 9	5,5	1,5			10
≥ 150 ... ≤ 600	d + 15	d + 11	6,5	2			13

Operating parameters

Sealing material	Temperature	max. speed
ECOPUR®	**-30 °C...+110 °C**	**4 m/s**
H-ECOPUR™	-20 °C...+110 °C	
S-ECOPUR™	-20 °C...+110 °C	5 m/s
T-ECOPUR™	-50 °C...+110 °C	4 m/s
X-ECOPUR™	-30 °C...+110 °C	4 m/s
XH-ECOPUR™	-20 °C...+110 °C	4 m/s
XS-ECOPUR™	-20 °C...+110 °C	5 m/s
SKF ECORUBBER-1	-30 °C...+100 °C	4 m/s
SKF ECORUBBER-2	-20 °C...+200 °C	
SKF ECORUBBER-3	-50 °C...+150 °C	
SKF ECORUBBER-H	-25 °C...+150 °C	
SKF ECOFLAS	-10 °C...+200 °C	

The stated operation conditions represent general indications. It is recommended not to use all maximum values simultaneously. Surface speed limits apply only to the presence of adequate lubrication film.

Ordering example

A04-A, d=50mm, D=58mm, D1=56mm, L=4mm, L1=1mm, ECOPUR®

Wiper A04-A	**50 x 58/56 x 4/1**	**ECOPUR®**
Profile	d x D/D1 x L/L1	Sealing material

Seal data sheet

Wipers

A04-B

Seal housing

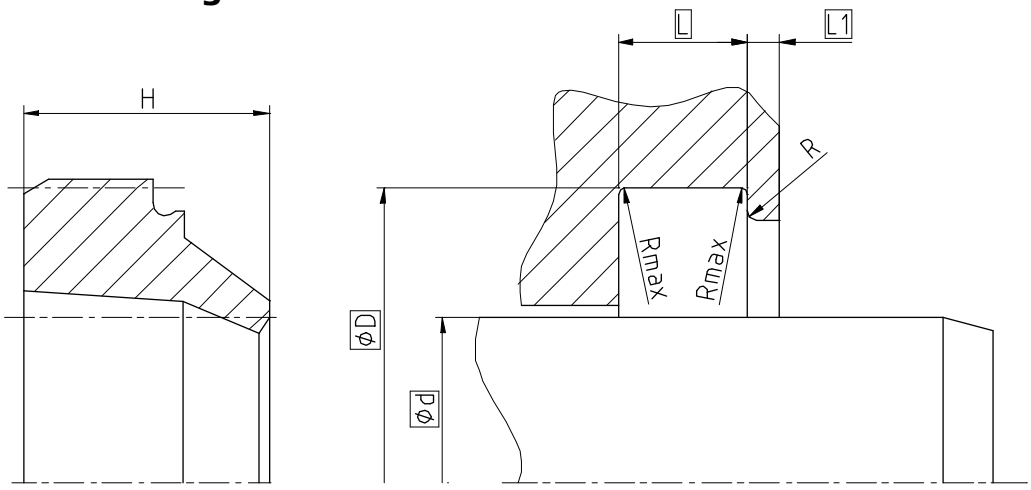

Surface roughness	Rtmax	Ra
Sliding Surface	≤ 2,5 µm	0,1...0,5 µm
Bottom of groove	≤ 6,3 µm	≤ 1,6 µm
Groove face	≤ 15 µm	≤ 3 µm

Ordering dimensions...☐

Bearing area: 50...95% and a cutting depth of 0,5xRz based on Cref = 0%

Standard dimensions

Ød f8	**ØD** H11	**ØD1** H11	**L** +0,2	**L1**	**Rmax**	**R**	**H**
≥ 5 ... ≤ 100	d + 8	d + 6	4	1	0,4	≤ 0,4	7
> 100 ... < 150	d + 12	d + 9	5,5	1,5			10
≥ 150 ... ≤ 600	d + 15	d + 11	6,5	2			13

Operating parameters

Sealing material	Temperature	max. speed
ECOPUR®	**-30 °C...+110 °C**	**4 m/s**
H-ECOPUR™	-20 °C...+110 °C	
S-ECOPUR™	-20 °C...+110 °C	5 m/s
T-ECOPUR™	-50 °C...+110 °C	4 m/s
X-ECOPUR™	-30 °C...+110 °C	4 m/s
XH-ECOPUR™	-20 °C...+110 °C	
XS-ECOPUR™	-20 °C...+110 °C	5 m/s
SKF ECORUBBER-1	-30 °C...+100 °C	4 m/s
SKF ECORUBBER-2	-20 °C...+200 °C	
SKF ECORUBBER-3	-50 °C...+150 °C	
SKF ECORUBBER-H	-25 °C...+150 °C	
SKF ECOFLAS	-10 °C...+200 °C	

The stated operation conditions represent general indications. It is recommended not to use all maximum values simultaneously. Surface speed limits apply only to the presence of adequate lubrication film.

Ordering example

A04-B, d=50mm, D=58mm, D1=56mm, L=4mm, L1=1mm, ECOPUR®

Wiper A04-B	**50 x 58/56 x 4/1**	**ECOPUR®**
Profile	d x D/D1 x L/L1	Sealing material

Seal data sheet

Wipers

A05-A

Seal housing

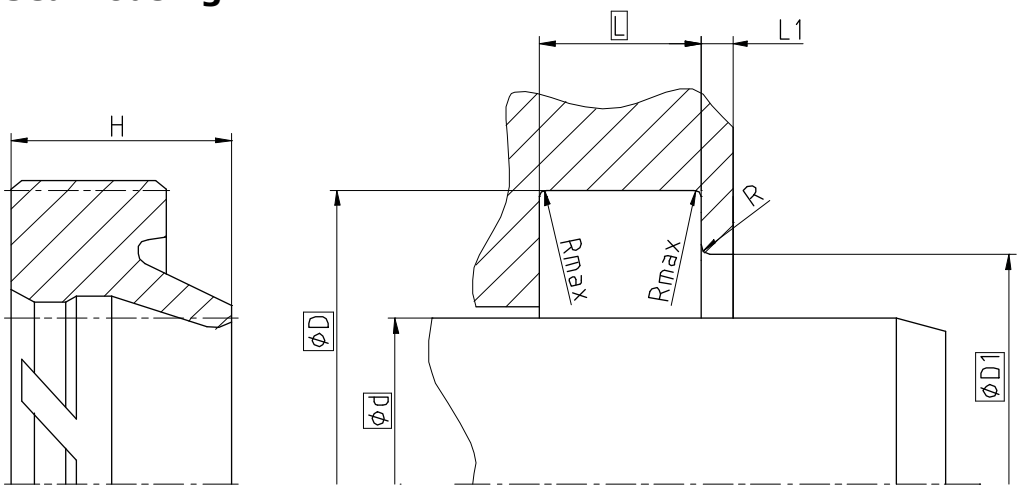

Surface roughness	Rtmax	Ra
Sliding Surface	≤ 2,5 µm	0,1...0,5 µm
Bottom of groove	≤ 6,3 µm	≤ 1,6 µm
Groove face	≤ 15 µm	≤ 3 µm

Ordering dimensions...☐

Bearing area: 50...95% and a cutting depth of 0,5xRz based on Cref = 0%

Standard dimensions

Ød f8	**ØD** H11	**ØD1** H11	**L** +0,2	**L1**	**Rmax**	**R**	**H**
≥ 11 ... ≤ 50	d + 8	d + 4	5	≥ 2	0,4	≤ 0,3	8
> 50 ... < 100	d + 10	d + 5	6				9,7
≥ 100 ... ≤ 600	d + 15	d + 7,5	8,5				13

Operating parameters

Sealing material	Temperature	max. speed
ECOPUR®	**-30 °C...+110 °C**	**4 m/s**
H-ECOPUR™	-20 °C...+110 °C	
S-ECOPUR™	-20 °C...+110 °C	5 m/s
T-ECOPUR™	-50 °C...+110 °C	4 m/s
X-ECOPUR™	-30 °C...+110 °C	4 m/s
XH-ECOPUR™	-20 °C...+110 °C	
XS-ECOPUR™	-20 °C...+110 °C	5 m/s
SKF ECORUBBER-1	-30 °C...+100 °C	4 m/s
SKF ECORUBBER-2	-20 °C...+200 °C	
SKF ECORUBBER-3	-50 °C...+150 °C	
SKF ECORUBBER-H	-25 °C...+150 °C	
SKF ECOFLAS	-10 °C...+200 °C	

The stated operation conditions represent general indications. It is recommended not to use all maximum values simultaneously. Surface speed limits apply only to the presence of adequate lubrication film.

Ordering example

A05-A, d=50mm, D=58mm, D1=54mm, L=5mm, ECOPUR®

Wiper A05-A	**50 x 58/54 x 5**	**ECOPUR®**
Profile	d x D/D1 x L	Sealing material

Seal data sheet

Wipers

A05-B

Seal housing

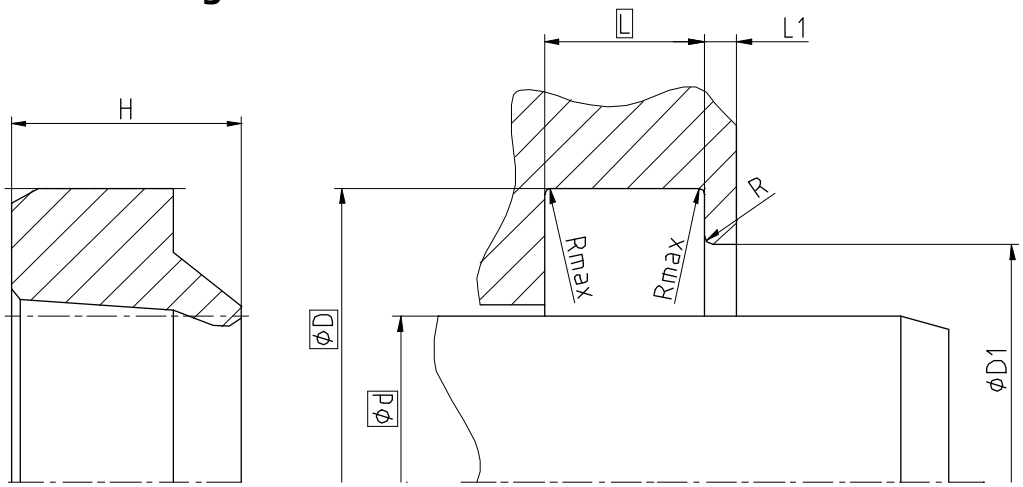

Surface roughness	Rtmax	Ra
Sliding Surface	≤ 2,5 µm	0,1...0,5 µm
Bottom of groove	≤ 6,3 µm	≤ 1,6 µm
Groove face	≤ 15 µm	≤ 3 µm

Ordering dimensions...☐

Bearing area: 50...95% and a cutting depth of 0,5xRz based on Cref = 0%

Standard dimensions

Ød f8	**ØD** H11	**ØD1** H11	**L** +0,2	**L1**	**Rmax**	**R**	**H**
≥ 5 ... ≤ 50	d + 8	d + 4	5	≤ 2	0,4	≤ 0,3	7,15
> 50 ... < 100	d + 10	d + 5	6				8,6
≥ 100 ... ≤ 600	d + 15	d + 7,5	8,5				12,15

Operating parameters

Sealing material	Temperature	max. speed
ECOPUR®	**-30 °C...+110 °C**	**4 m/s**
H-ECOPUR™	-20 °C...+110 °C	
S-ECOPUR™	-20 °C...+110 °C	5 m/s
T-ECOPUR™	-50 °C...+110 °C	4 m/s
X-ECOPUR™	-30 °C...+110 °C	4 m/s
XH-ECOPUR™	-20 °C...+110 °C	
XS-ECOPUR™	-20 °C...+110 °C	5 m/s
SKF ECORUBBER-1	-30 °C...+100 °C	4 m/s
SKF ECORUBBER-2	-20 °C...+200 °C	
SKF ECORUBBER-3	-50 °C...+150 °C	
SKF ECORUBBER-H	-25 °C...+150 °C	
SKF ECOFLAS	-10 °C...+200 °C	

The stated operation conditions represent general indications. It is recommended not to use all maximum values simultaneously. Surface speed limits apply only to the presence of adequate lubrication film.

Ordering example

A05-B, d=50mm, D=58mm, L=5mm, ECOPUR®

Wiper A05-B	**50 x 58 x 5**	**ECOPUR®**
Profile	d x D x L	Sealing material

Seal data sheet

A05-I

Wipers

Seal housing

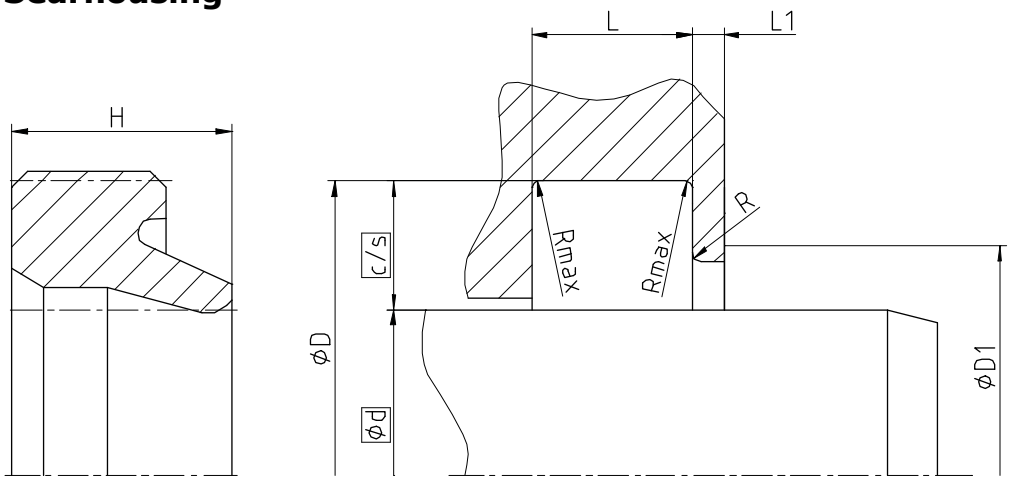

Surface roughness	Rtmax	Ra
Sliding Surface	≤ 2,5 µm	0,1...0,5 µm
Bottom of groove	≤ 6,3 µm	≤ 1,6 µm
Groove face	≤ 15 µm	≤ 3 µm

Ordering dimensions...☐

Bearing area: 50...95% and a cutting depth of 0,5xRz based on Cref = 0%

Standard dimensions

Ød f8	**c/s**	**ØD** H11	**ØD1** H11	**L** +0,2	**L1**	**Rmax**	**R**	**H**
≥ 5 ... ≤ 28	3	d + 6	d + 2,5	4	≥ 2	0,4	≤ 0,4	5,3
> 28 ... ≤ 56	4	d + 8	d + 3	5				7
> 56 ... ≤ 110	5	d + 10	d + 3	6				8
> 110 ... ≤ 600	7,5	d + 15	d + 4	8,5				11

Operating parameters

Sealing material	Temperature	max. speed
ECOPUR®	**-30 °C...+110 °C**	**4 m/s**
H-ECOPUR™	-20 °C...+110 °C	
S-ECOPUR™	-20 °C...+110 °C	5 m/s
T-ECOPUR™	-50 °C...+110 °C	4 m/s
X-ECOPUR™	-30 °C...+110 °C	4 m/s
XH-ECOPUR™	-20 °C...+110 °C	
XS-ECOPUR™	-20 °C...+110 °C	5 m/s
SKF ECORUBBER-1	-30 °C...+100 °C	4 m/s
SKF ECORUBBER-2	-20 °C...+200 °C	
SKF ECORUBBER-3	-50 °C...+150 °C	
SKF ECORUBBER-H	-25 °C...+150 °C	
SKF ECOFLAS	-10 °C...+200 °C	

The stated operation conditions represent general indications. It is recommended not to use all maximum values simultaneously. Surface speed limits apply only to the presence of adequate lubrication film.

Ordering example

A05-I, d=50mm, c/s=4mm, ECOPUR®

Wiper A05-I	**50 x 4**	**ECOPUR®**
Profile	d x c/s	Sealing material

Seal data sheet

Wipers

A06-A

Seal housing

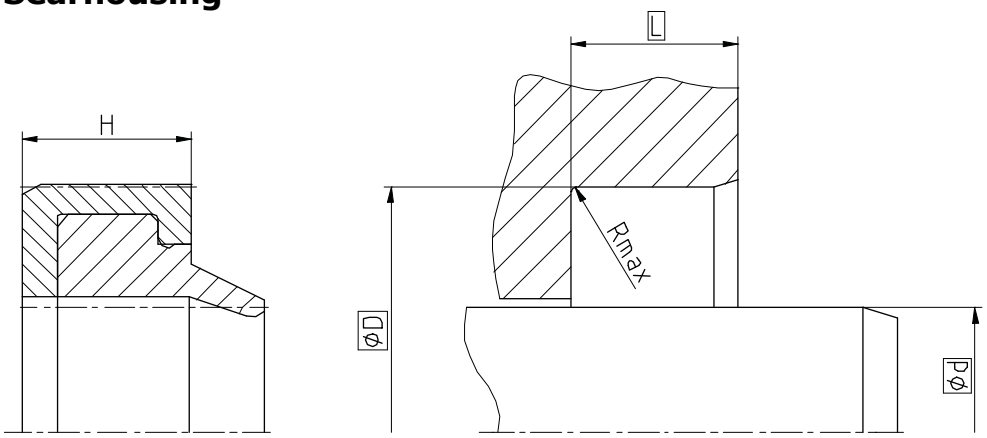

Surface roughness	Rtmax	Ra
Sliding Surface	≤ 2,5 µm	0,1...0,5 µm
Bottom of groove	≤ 6,3 µm	≤ 1,6 µm
Groove face	≤ 15 µm	≤ 3 µm

Ordering dimensions...☐

Bearing area: 50...95% and a cutting depth of 0,5xRz based on Cref = 0%

Standard dimensions

Ød f8			**ØD** H8	**L** +0,2	**Rmax**	**H**
≥ 22	...	< 100	d + 10	7	0,4	10
≥ 100	...	≤ 200	d + 15	9		12
> 200	...	≤ 600	d + 20	12		16

Operating parameters

Sealing material	Housing	Temperature	max. speed
ECOPUR®	**SKF ECOTAL** SKF ECOMID[1]	**-30 °C...+80 °C**	**4 m/s**
H-ECOPUR™		-20 °C...+80 °C	
S-ECOPUR™		-20 °C...+80 °C	5 m/s
T-ECOPUR™		-50 °C...+80 °C	4 m/s
X-ECOPUR™	SKF ECOTAL SKF ECOMID[1]	-30 °C...+80 °C	4 m/s
XH-ECOPUR™		-20 °C...+80 °C	
XS-ECOPUR™		-20 °C...+80 °C	5 m/s
SKF ECORUBBER-1	SKF ECOTAL SKF ECOMID[1]	-30 °C...+80 °C	4 m/s
SKF ECORUBBER-2	SKF ECOPAEK	-20 °C...+200 °C	
SKF ECORUBBER-3		-50 °C...+150 °C	
SKF ECORUBBER-H	SKF ECOTAL SKF ECOMID[1]	-25 °C...+80 °C	
	SKF ECOPAEK	-20 °C...+150 °C	
SKF ECOFLAS		-10 °C...+200 °C	

The stated operation conditions represent general indications. It is recommended not to use all maximum values simultaneously. Surface speed limits apply only to the presence of adequate lubrication film.

[1] ≤ Ø260mm: SKF ECOTAL ; > Ø260mm: SKF ECOMID

Ordering example

A06-A, d=50mm, D=60mm, L=7mm, ECOPUR® / SKF ECOTAL

Wiper A06-A	**50 x 60 x 7**	**ECOPUR® / SKF ECOTAL**
Profile	d x D x L	Sealing material / Housing

Seal data sheet

Wipers

A07-A

Seal housing

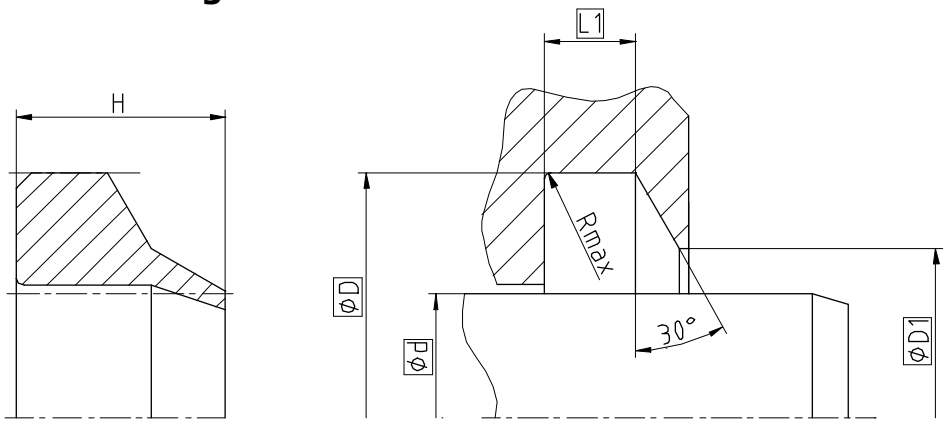

Surface roughness	Rtmax	Ra
Sliding Surface	≤ 2,5 µm	0,1...0,5 µm
Bottom of groove	≤ 6,3 µm	≤ 1,6 µm
Groove face	≤ 15 µm	≤ 3 µm

Ordering dimensions...☐

Bearing area: 50...95% and a cutting depth of 0,5xRz based on Cref = 0%

Standard dimensions

Ød f8			**ØD** ±0,127	**ØD1** ±0,127	**L1** +0,127	**Rmax**
≥ 22	...	≤ 50	d + 8	d + 3	3,4	0,4
> 50	...	< 200	d + 12,7	d + 5,4	5,3	

Operating parameters

Sealing material	Temperature	max. speed
ECOPUR®	**-30 °C...+110 °C**	**4 m/s**
H-ECOPUR™	-20 °C...+110 °C	
S-ECOPUR™	-20 °C...+110 °C	5 m/s
T-ECOPUR™	-50 °C...+110 °C	4 m/s
X-ECOPUR™	-30 °C...+110 °C	4 m/s
XH-ECOPUR™	-20 °C...+110 °C	
XS-ECOPUR™	-20 °C...+110 °C	5 m/s
SKF ECORUBBER-1	-30 °C...+100 °C	4 m/s
SKF ECORUBBER-2	-20 °C...+200 °C	
SKF ECORUBBER-3	-50 °C...+150 °C	
SKF ECORUBBER-H	-25 °C...+150 °C	
SKF ECOFLAS	-10 °C...+200 °C	

The stated operation conditions represent general indications. It is recommended not to use all maximum values simultaneously. Surface speed limits apply only to the presence of adequate lubrication film.

Ordering example

A07-A, d=50mm, D=58mm, D1=53mm, L1=3,4mm, ECOPUR®

Wiper A07-A	**50 x 58/53 x 3,4**	**ECOPUR®**
Profile	d x D/D1 x L1	Sealing material

Seal data sheet

Wipers

A08-A

Seal housing

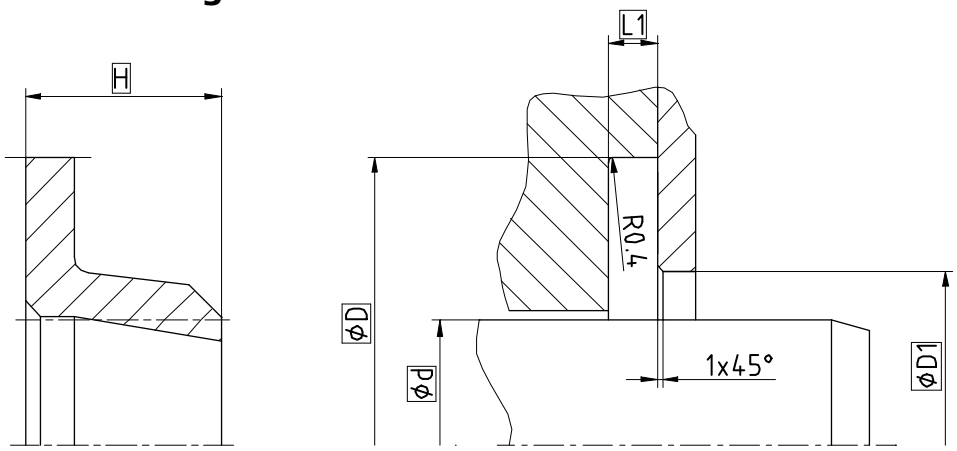

Surface roughness	Rtmax	Ra
Sliding Surface	≤ 2,5 µm	0,1...0,5 µm
Bottom of groove	≤ 6,3 µm	≤ 1,6 µm
Groove face	≤ 15 µm	≤ 3 µm

Ordering dimensions...☐

Bearing area: 50...95% and a cutting depth of 0,5xRz based on Cref = 0%

Standard dimensions

minimum nominal inside diameter Ød ≥ 6mm
This is not a standard profile and serves as a replacement for an existing installation space. New constructions should use standard profiles.

Operating parameters

Sealing material	Temperature	max. speed
ECOPUR®	**-30 °C...+110 °C**	**4 m/s**
H-ECOPUR™	-20 °C...+110 °C	
S-ECOPUR™	-20 °C...+110 °C	5 m/s
T-ECOPUR™	-50 °C...+110 °C	4 m/s
X-ECOPUR™	-30 °C...+110 °C	4 m/s
XH-ECOPUR™	-20 °C...+110 °C	
XS-ECOPUR™	-20 °C...+110 °C	5 m/s
SKF ECORUBBER-1	-30 °C...+100 °C	4 m/s
SKF ECORUBBER-2	-20 °C...+200 °C	
SKF ECORUBBER-3	-50 °C...+150 °C	
SKF ECORUBBER-H	-25 °C...+150 °C	
SKF ECOFLAS	-10 °C...+200 °C	

The stated operation conditions represent general indications. It is recommended not to use all maximum values simultaneously. Surface speed limits apply only to the presence of adequate lubrication film.

Ordering example

A08-A, d=50mm, D=70mm, D1=56mm, L1=3mm, H=12mm, ECOPUR®

Wiper A08-A	**50 x 70/56 x 3/12**	**ECOPUR®**
Profile	d x D/D1 x L1/H	Sealing material

Seal data sheet

Wipers

A08-B

Seal housing

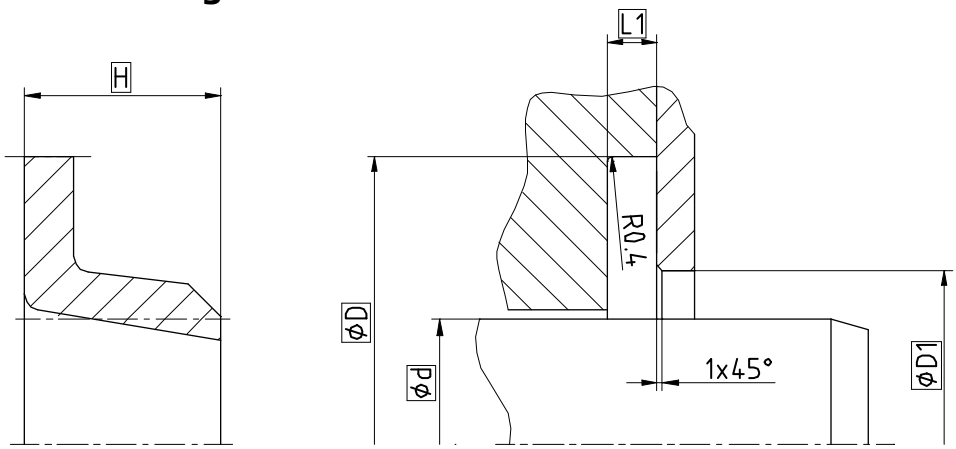

Surface roughness	Rtmax	Ra
Sliding Surface	≤ 2,5 µm	0,1...0,5 µm
Bottom of groove	≤ 6,3 µm	≤ 1,6 µm
Groove face	≤ 15 µm	≤ 3 µm

Ordering dimensions...☐

Bearing area: 50...95% and a cutting depth of 0,5xRz based on Cref = 0%

Standard dimensions

minimum nominal inside diameter Ød ≥ 11mm
This is not a standard profile and serves as a replacement for an existing installation space. New constructions should use standard profiles.

Operating parameters

Sealing material	Temperature	max. speed
ECOPUR®	**-30 °C...+110 °C**	**4 m/s**
H-ECOPUR™	-20 °C...+110 °C	
S-ECOPUR™	-20 °C...+110 °C	5 m/s
T-ECOPUR™	-50 °C...+110 °C	4 m/s
X-ECOPUR™	-30 °C...+110 °C	4 m/s
XH-ECOPUR™	-20 °C...+110 °C	
XS-ECOPUR™	-20 °C...+110 °C	5 m/s
SKF ECORUBBER-1	-30 °C...+100 °C	4 m/s
SKF ECORUBBER-2	-20 °C...+200 °C	
SKF ECORUBBER-3	-50 °C...+150 °C	
SKF ECORUBBER-H	-25 °C...+150 °C	
SKF ECOFLAS	-10 °C...+200 °C	

The stated operation conditions represent general indications. It is recommended not to use all maximum values simultaneously. Surface speed limits apply only to the presence of adequate lubrication film.

Ordering example

A08-B, d=50mm, D=70mm, D1=56mm, L1=3mm, H=12mm, ECOPUR®

Wiper A08-B	**50 x 70/56 x 3/12**	**ECOPUR®**
Profile	d x D/D1 x L1/H	Sealing material

Seal data sheet

Wipers

A09-A

Seal housing

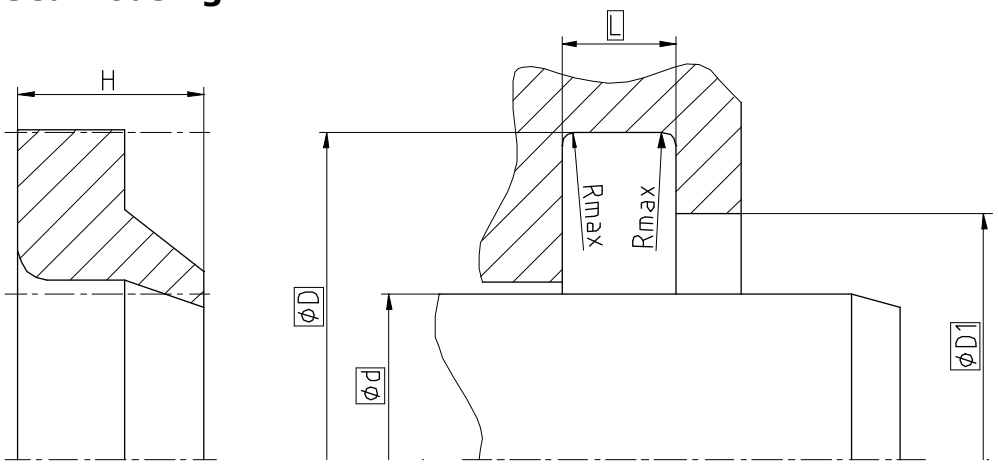

Surface roughness	Rtmax	Ra
Sliding Surface	≤ 2,5 µm	0,1...0,5 µm
Bottom of groove	≤ 6,3 µm	≤ 1,6 µm
Groove face	≤ 15 µm	≤ 3 µm

Ordering dimensions...☐

Bearing area: 50...95% and a cutting depth of 0,5xRz based on Cref = 0%

Standard dimensions

Ød f8			**ØD** H10	**ØD1** H11	**L** +0,1	**Rmax**
≥ 5		≤ 65	d + 7	d + 4	2,7	0,4
≥ 65	...	≤ 100	d + 9,3	d + 5	3,1	0,4
≥ 100	...	≤ 140	d + 11	d + 6	3,5	0,4
≥ 140	...	≤ 280	d + 12,5	d + 7	3,9	0,4
≥ 280	...	≤ 600	d + 12,5	d + 7	4,3	0,4

Operating parameters

Sealing material	Temperature	max. speed
ECOPUR®	**-30 °C...+110 °C**	**4 m/s**
H-ECOPUR™	-20 °C...+110 °C	
S-ECOPUR™	-20 °C...+110 °C	5 m/s
T-ECOPUR™	-50 °C...+110 °C	4 m/s
X-ECOPUR™	-30 °C...+110 °C	4 m/s
XH-ECOPUR™	-20 °C...+110 °C	
XS-ECOPUR™	-20 °C...+110 °C	5 m/s
SKF ECORUBBER-1	-30 °C...+100 °C	4 m/s
SKF ECORUBBER-2	-20 °C...+200 °C	
SKF ECORUBBER-3	-50 °C...+150 °C	
SKF ECORUBBER-H	-25 °C...+150 °C	
SKF ECOFLAS	-10 °C...+200 °C	

The stated operation conditions represent general indications. It is recommended not to use all maximum values simultaneously. Surface speed limits apply only to the presence of adequate lubrication film.

Ordering example

A09-A, d=70mm, D=79,3mm, D1=75mm, L=3,1mm ECOPUR®

Wiper A09-A	**70 x 79,3/75 x 3,1**	**ECOPUR®**
Profile	d x D/D1 x L	Sealing material

Seal data sheet

Wipers

A10-A

Seal housing

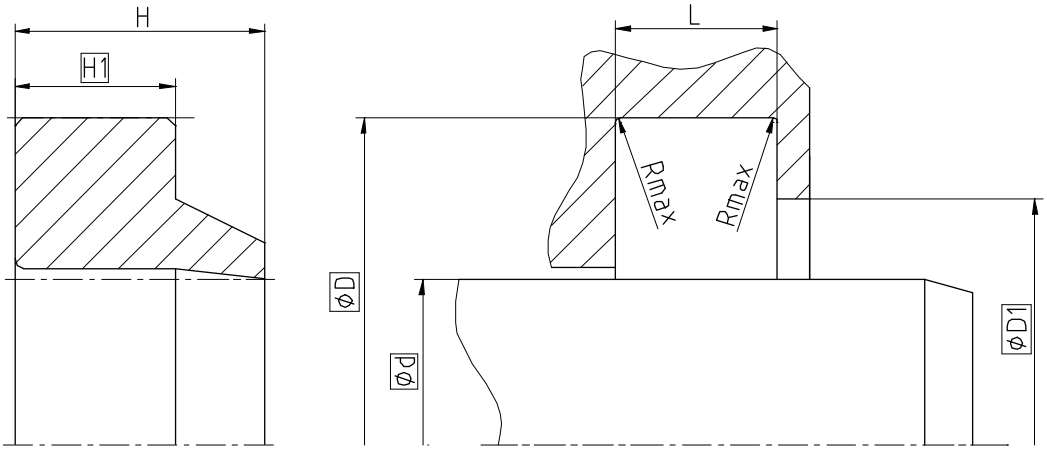

Surface roughness	Rtmax	Ra
Sliding Surface	≤ 2,5 µm	0,1...0,5 µm
Bottom of groove	≤ 6,3 µm	≤ 1,6 µm
Groove face	≤ 15 µm	≤ 3 µm

Ordering dimensions...☐

Bearing area: 50...95% and a cutting depth of 0,5xRz based on Cref = 0%

Standard dimensions

Ød f8			**ØD** H10	**ØD1** H11	**L** +0,2	**Rmax**	**c/s**
≥ 6	...	≤ 17,5	d + 6,35	d + 4,1	3,15	0,4	3,15
> 17,5	...	≤ 50	d + 9,5	d + 6,3	4,75		4,72
> 50	...	≤ 600	d + 12,7	d + 8,3	6,3		6,3

Operating parameters

Sealing material	Temperature	max. speed
ECOPUR®	**-30 °C...+110 °C**	**4 m/s**
H-ECOPUR™	-20 °C...+110 °C	
S-ECOPUR™	-20 °C...+110 °C	5 m/s
T-ECOPUR™	-50 °C...+110 °C	4 m/s
X-ECOPUR™	-30 °C...+110 °C	4 m/s
XH-ECOPUR™	-20 °C...+110 °C	
XS-ECOPUR™	-20 °C...+110 °C	5 m/s
SKF ECORUBBER-1	-30 °C...+100 °C	4 m/s
SKF ECORUBBER-2	-20 °C...+200 °C	
SKF ECORUBBER-3	-50 °C...+150 °C	
SKF ECORUBBER-H	-25 °C...+150 °C	
SKF ECOFLAS	-10 °C...+200 °C	

The stated operation conditions represent general indications. It is recommended not to use all maximum values simultaneously. Surface speed limits apply only to the presence of adequate lubrication film.

Ordering example

A10-A, d=50mm, D=59,5mm, D1=56,3mm, L=4,75mm, ECOPUR®

Wiper A10-A	**50 x 59,5/56,3 x 4,75**	**ECOPUR®**
Profile	d x D/D1 x L	Sealing material

Seal data sheet

Wipers

A11-A

Seal housing

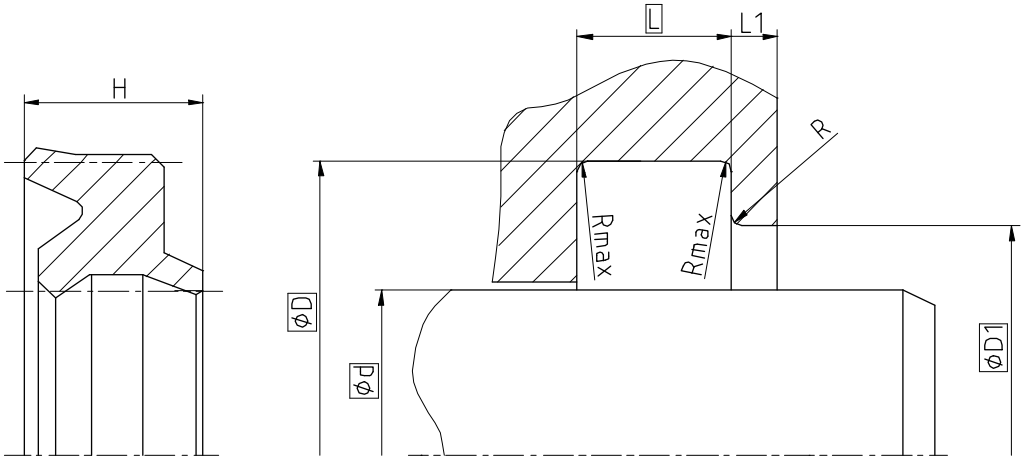

Surface roughness	Rtmax	Ra
Sliding Surface	≤ 2,5 µm	0,1...0,5 µm
Bottom of groove	≤ 6,3 µm	≤ 1,6 µm
Groove face	≤ 15 µm	≤ 3 µm

Ordering dimensions...☐

Bearing area: 50...95% and a cutting depth of 0,5xRz based on Cref = 0%

Standard dimensions

Ød f8	**ØD** H11	**ØD1** H11	**L** +0,2	**L1**	**Rmax**	**R**	**H**
≥ 5 ... ≤ 50	d + 8	d + 4	5	≥ 2	0,4	≤ 0,3	8
> 500 ... < 100	d + 10	d + 5	6			≤ 0,4	9,7
≥ 100	d + 15	d + 7,5	8,5				13

Operating parameters

Sealing material	Temperature	max. speed
ECOPUR®	**-30 °C...+110 °C**	**4 m/s**
H-ECOPUR™	-20 °C...+110 °C	
S-ECOPUR™	-20 °C...+110 °C	5 m/s
T-ECOPUR™	-50 °C...+110 °C	4 m/s
G-ECOPUR™	-30 °C...+110 °C	
SKF ECORUBBER-1	-30 °C...+100 °C	4 m/s
SKF ECORUBBER-2	-20 °C...+200 °C	
SKF ECORUBBER-3	-50 °C...+150 °C	
SKF ECORUBBER-H	-25 °C...+150 °C	
SKF ECOFLAS	-10 °C...+200 °C	

The stated operation conditions represent general indications. It is recommended not to use all maximum values simultaneously. Surface speed limits apply only to the presence of adequate lubrication film.

Ordering example

A11-A, d=50mm, D=58mm, D1=54mm, L=5mm, ECOPUR®

Wiper A11-A	**50 x 58/54 x 5**	**ECOPUR®**
Profile	d x D/D1 x L	Sealing material

Seal data sheet

Wipers

A11-I

Seal housing

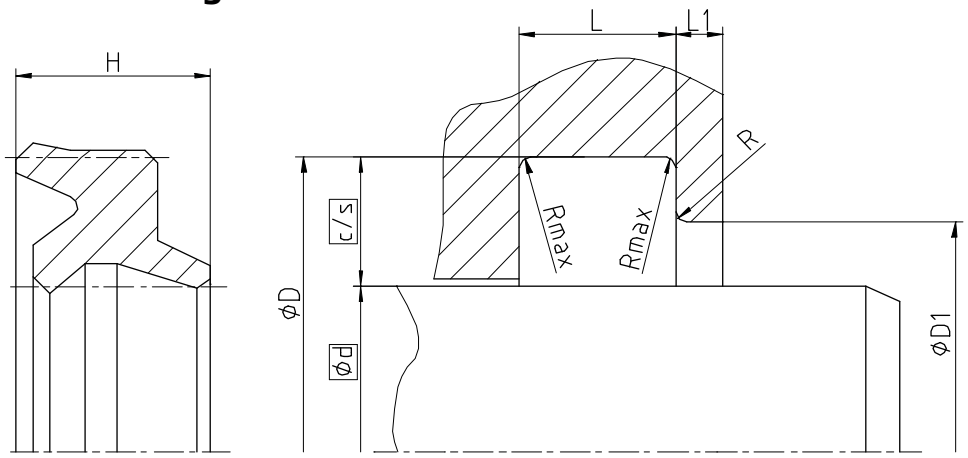

Surface roughness	Rtmax	Ra
Sliding Surface	≤ 2,5 µm	0,1...0,5 µm
Bottom of groove	≤ 6,3 µm	≤ 1,6 µm
Groove face	≤ 15 µm	≤ 3 µm

Ordering dimensions...☐

Bearing area: 50...95% and a cutting depth of 0,5xRz based on Cref = 0%

Standard dimensions

Ød f8	**c/s**	**ØD** H11	**ØD1** H11	**L** +0,2	**L1**	**Rmax**	**R**	**H**
≥ 5 ... ≤ 28	3	d + 6	d + 2,5	4	≥ 2	0,4	≤ 0,4	5,1
> 28 ... ≤ 56	4	d + 8	d + 3	5				6,8
> 56 ... ≤ 110	5	d + 12	d + 3	6				7,8
> 110	7,5	d + 15	d + 4	8,5				10,8

Operating parameters

Sealing material	Temperature	max. speed
ECOPUR®	**-30 °C...+110 °C**	**4 m/s**
H-ECOPUR™	-20 °C...+110 °C	
S-ECOPUR™	-20 °C...+110 °C	5 m/s
T-ECOPUR™	-50 °C...+110 °C	4 m/s
G-ECOPUR™	-30 °C...+110 °C	
SKF ECORUBBER-1	-30 °C...+100 °C	4 m/s
SKF ECORUBBER-2	-20 °C...+200 °C	
SKF ECORUBBER-3	-50 °C...+150 °C	
SKF ECORUBBER-H	-25 °C...+150 °C	
SKF ECOFLAS	-10 °C...+200 °C	

The stated operation conditions represent general indications. It is recommended not to use all maximum values simultaneously. Surface speed limits apply only to the presence of adequate lubrication film.

Ordering example

A11-I, d=50mm, c/s=4mm, ECOPUR®

Wiper A11-I	**50 x 4**	**ECOPUR®**
Profile	d x c/s	Sealing material

Seal data sheet

Wipers

A12-A

Seal housing

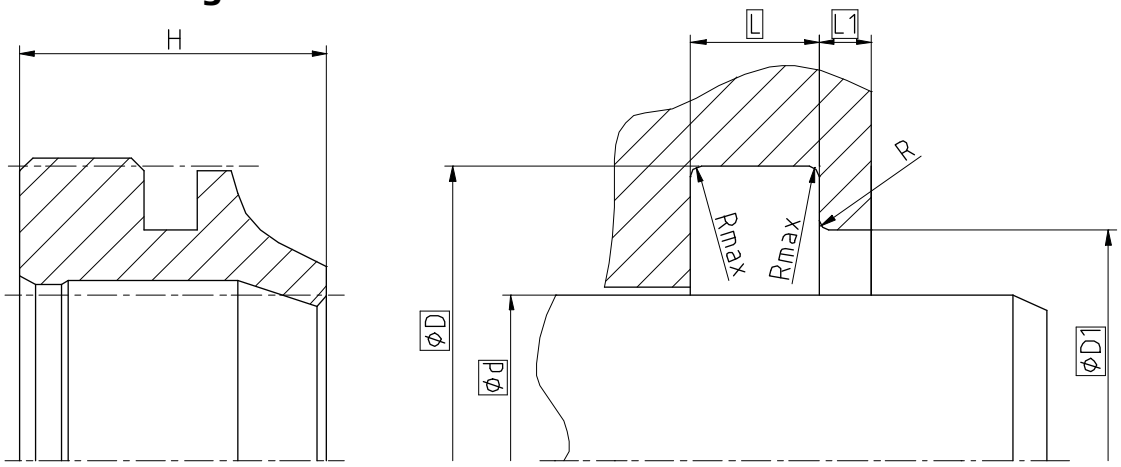

Surface roughness	Rtmax	Ra
Sliding Surface	≤ 2,5 µm	0,1...0,5 µm
Bottom of groove	≤ 6,3 µm	≤ 1,6 µm
Groove face	≤ 15 µm	≤ 3 µm

Ordering dimensions...☐

Bearing area: 50...95% and a cutting depth of 0,5xRz based on Cref = 0%

Standard dimensions

Ød f8			**ØD** H11	**ØD1** H11	**L** +0,2	**L1**	**Rmax**	**R**	**H**
≥ 11	...	≤ 100	d + 8	d + 4	5	1,5	0,4	≤ 0,3	8
> 100	...	< 150	d + 10	d + 5	6	2		≤ 0,4	9,7
≥ 150	...	≤ 600	d + 15	d +7,5	8,5	3			13

Operating parameters

Sealing material	Temperature	max. speed
ECOPUR®	**-30 °C...+110 °C**	**4 m/s**
H-ECOPUR™	-20 °C...+110 °C	
S-ECOPUR™	-20 °C...+110 °C	5 m/s
T-ECOPUR™	-50 °C...+110 °C	4 m/s
X-ECOPUR™	-30 °C...+110 °C	4 m/s
XH-ECOPUR™	-20 °C...+110 °C	
XS-ECOPUR™	-20 °C...+110 °C	5 m/s
SKF ECORUBBER-1	-30 °C...+100 °C	4 m/s
SKF ECORUBBER-2	-20 °C...+200 °C	
SKF ECORUBBER-3	-50 °C...+150 °C	
SKF ECORUBBER-H	-25 °C...+150 °C	
SKF ECOFLAS	-10 °C...+200 °C	

The stated operation conditions represent general indications. It is recommended not to use all maximum values simultaneously. Surface speed limits apply only to the presence of adequate lubrication film.

Ordering example

A12-A, d=50mm, D=58mm, D1=54mm, L=5mm, L1=1,5mm, ECOPUR®

Wiper A12-A	**50 x 58/54 x 5/1,5**	**ECOPUR®**
Profile	d x D/D1 x L/L1	Sealing material

Seal data sheet

Wipers

A12-B

Seal housing

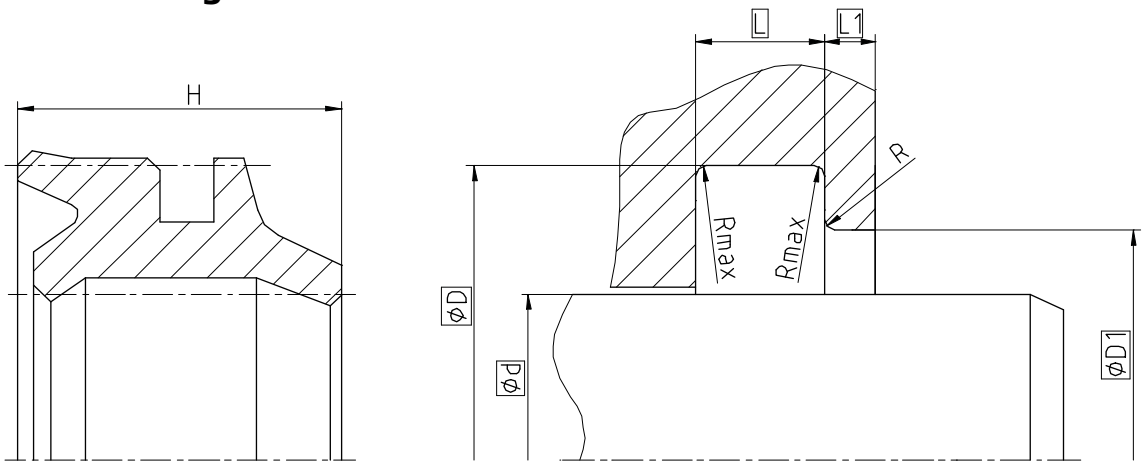

Surface roughness	Rtmax	Ra
Sliding Surface	≤ 2,5 µm	0,1...0,5 µm
Bottom of groove	≤ 6,3 µm	≤ 1,6 µm
Groove face	≤ 15 µm	≤ 3 µm

Ordering dimensions...☐

Bearing area: 50...95% and a cutting depth of 0,5xRz based on Cref = 0%

Standard dimensions

Ød f8			**ØD** H11	**ØD1** H11	**L** +0,2	**L1**	**Rmax**	**R**
≥ 5	...	≤ 50	d + 8	d + 4	5	1,5	0,4	≤ 0,3
> 50	...	< 100	d + 10	d + 5	6	2		≤ 0,4
≥ 100	...	≤ 600	d + 15	d +7,5	8,5	3		

Operating parameters

Sealing material	Temperature	max. speed
ECOPUR®	**-30 °C...+110 °C**	**4 m/s**
H-ECOPUR™	-20 °C...+110 °C	
S-ECOPUR™	-20 °C...+110 °C	5 m/s
T-ECOPUR™	-50 °C...+110 °C	4 m/s
SKF ECORUBBER-1	-30 °C...+100 °C	4 m/s
SKF ECORUBBER-2	-20 °C...+200 °C	
SKF ECORUBBER-3	-50 °C...+150 °C	
SKF ECORUBBER-H	-25 °C...+150 °C	
SKF ECOFLAS	-10 °C...+200 °C	

The stated operation conditions represent general indications. It is recommended not to use all maximum values simultaneously. Surface speed limits apply only to the presence of adequate lubrication film.

Ordering example

A12-B, d=50mm, D=58mm, D1=54mm, L=5mm, L1=1,5mm, ECOPUR®

Wiper A12-B	**50 x 58/54 x 5/1,5**	**ECOPUR®**
Profile	d x D/D1 x L/L1	Sealing material

Seal data sheet

Wipers

A13-A

Seal housing

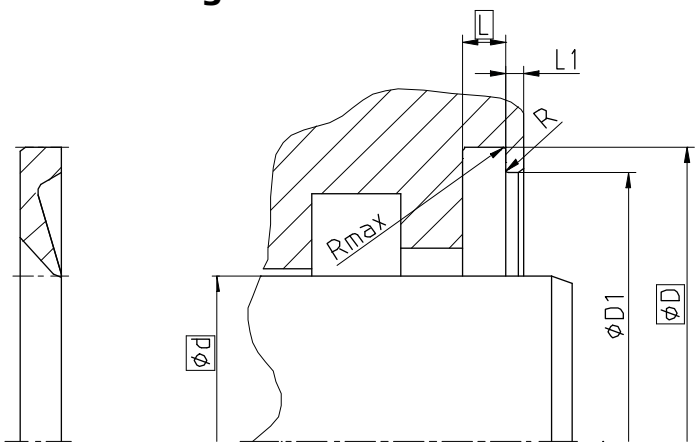

Surface roughness	Rtmax	Ra
Sliding Surface	≤ 2,5 µm	0,1...0,5 µm
Bottom of groove	≤ 6,3 µm	≤ 1,6 µm
Groove face	≤ 15 µm	≤ 3 µm

Ordering dimensions...☐

Bearing area: 50...95% and a cutting depth of 0,5xRz based on Cref = 0%

Standard dimensions

Ød f8			**ØD** H9	**ØD1** +0,1	**L** +0,2	**Rmax**
≥ 5	...	≤ 50	d + 10	d + 9	2	0,4
> 50	...	≤ 150	d + 15	d + 14	2,5	
> 150		≤ 600	d + 20	d + 18,5	3	

Operating parameters

Sealing material	Temperature	max. speed
X-ECOPUR™	-30 °C...+110 °C	4 m/s
XH-ECOPUR™	-20 °C...+110 °C	
XS-ECOPUR™	-20 °C...+110 °C	5 m/s
SKF ECOTAL SKF ECOMID[1]	**-40 °C...+80 °C**	**4 m/s**
SKF ECOPAEK	-60 °C...+110 °C	5 m/s
SKF ECOWEAR 1000	-200 °C...+80 °C	4 m/s

The stated operation conditions represent general indications. It is recommended not to use all maximum values simultaneously. Surface speed limits apply only to the presence of adequate lubrication film.

[1] ≤ Ø260mm: SKF ECOTAL ; > Ø260mm: SKF ECOMID

Ordering example

A13-A, d=60mm, D=75mm, D1=74mm, L=2,5mm, SKF ECOTAL

Wiper A13-A	**60 x 75/74 x 2,5**	**SKF ECOTAL**
Profile	d x D/D1 x L	Sealing material

Seal data sheet

Wipers

A25-F

Seal housing

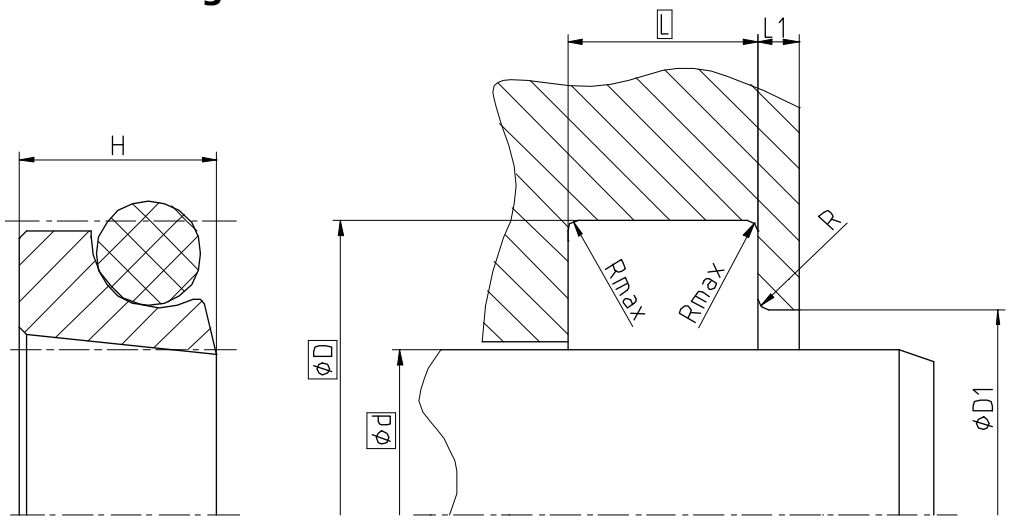

	PU		PTFE	
Surface roughness	Rtmax	Ra	Rtmax	Ra
Sliding Surface	≤ 2,5 µm	0,1...0,5 µm	≤ 2 µm	0,05...0,3 µm
Bottom of groove	≤ 6,3 µm	≤ 1,6 µm	≤ 6,3 µm	≤ 1,6 µm
Groove face	≤ 15 µm	≤ 3 µm	≤ 15 µm	≤ 3 µm

Ordering dimensions...☐

Bearing area: 50...95% and a cutting depth of 0,5xRz based on Cref = 0%

Standard dimensions

Ød f8			**ØD** H10	**ØOD**	**L** +0,2	**Rmax**	**ØD1** H11
≥ 5	...	≤ 11	d + 4,8	1,78	3,7	0,4	d + 2,7
> 11	...	< 63	d + 6,8	2,62	5,0	1,2	d + 3,5
≥ 63	...	< 400	d + 8,8	3,53	6,0	2,0	d + 4,0
> 400	...	< 600	d + 12,2	5,33	8,4	2,0	d + 6,0

Operating parameters

Glide ring	Energizer	Temperature	max. speed
X-ECOPUR™	NBR70	-30 °C...+100 °C	5 m/s
XH-ECOPUR™		-20 °C...+100 °C	
XS-ECOPUR™		-20 °C...+100 °C	
SKF ECOFLON 1 SKF ECOFLON 2 **SKF ECOFLON 3** SKF ECOFLON 4	**NBR70**	**-30 °C...+100 °C**	**10 m/s**
	FPM75	-20 °C...+200 °C	
SKF ECOWEAR 1000	NBR70	-30 °C...+80 °C	
	MVQ70	-55 °C...+80 °C	

The stated operation conditions represent general indications. It is recommended not to use all maximum values simultaneously. Surface speed limits apply only to the presence of adequate lubrication film.
The pressure on the standard version is limited to 16 bar.

Ordering example

A25-F, d=70mm, D=78,8mm, L=6mm, SKF ECOFLON 3 / NBR70

Wiper A25-F	**70 x 78,8 x 6**	**SKF ECOFLON 3 / NBR70**
Profile	d x D x L	Sealing material / Energizer

Seal data sheet

Wipers

A26-F

Seal housing

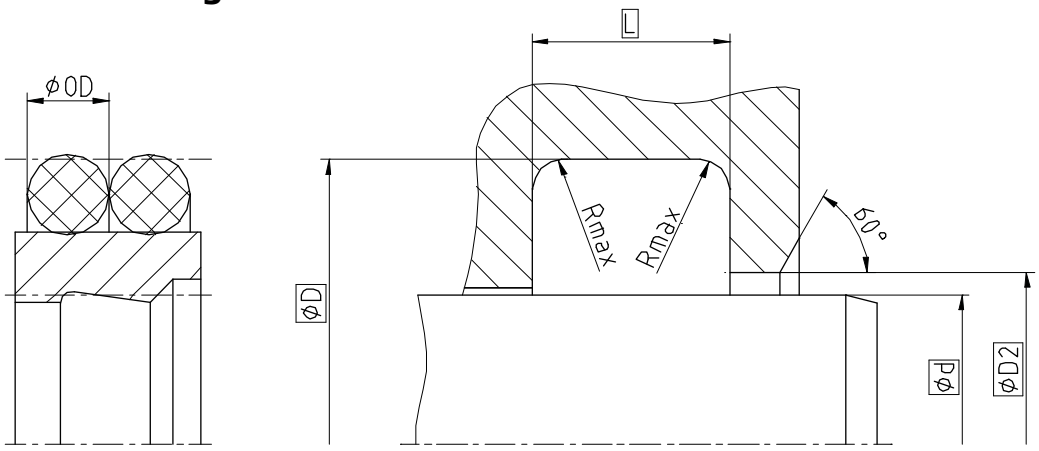

	PU		PTFE	
Surface roughness	Rtmax	Ra	Rtmax	Ra
Sliding Surface	≤ 2,5 µm	0,1...0,5 µm	≤ 2 µm	0,05...0,3 µm
Bottom of groove	≤ 6,3 µm	≤ 1,6 µm	≤ 6,3 µm	≤ 1,6 µm
Groove face	≤ 15 µm	≤ 3 µm	≤ 15 µm	≤ 3 µm

Ordering dimensions...☐

Bearing area: 50...95% and a cutting depth of 0,5xRz based on Cref = 0%

Standard dimensions

Ød f8			**ØD** H9	**ØOD**	**L** +0,2	**Rmax**	**ØD1** H11
≥ 5	...	≤ 30	d + 7,6	1,78	4,2	0,4	d + 1,0
> 30	...	< 80	d + 8,8	2,62	6,3	1,2	d + 1,5
≥ 80	...	<120	d + 12,2	3,53	8,1	2,0	d + 2,0
> 120	...	< 250	d + 16,0	5,33	11,5	2,0	d + 2,0
> 250	...	< 630	d + 24,0	7,00	15,5	2,0	d + 2,5
> 630	...	< 1000	d + 27,3	8,40	18,0	2,0	d + 2,5
> 1000	...	< 1250	d + 33,0	10,00	21,5	2,0	d + 2,5

Operating parameters

Glide ring	Energizer	Temperature	max. speed
X-ECOPUR™	NBR70	-30 °C...+100 °C	5 m/s
XH-ECOPUR™		-20 °C...+100 °C	
XS-ECOPUR™		-20 °C...+100 °C	
G-ECOPUR 54D™		-30 °C...+100 °C	
SKF ECOFLON 1 SKF ECOFLON 2 **SKF ECOFLON 3** SKF ECOFLON 4	**NBR70**	**-30 °C...+100 °C**	**10 m/s**
	FPM75	-20 °C...+200 °C	
SKF ECOWEAR 1000	NBR70	-30 °C...+80 °C	
	MVQ70	-55 °C...+80 °C	

The stated operation conditions represent general indications. It is recommended not to use all maximum values simultaneously. Surface speed limits apply only to the presence of adequate lubrication film.
The pressure on the standard version is limited to 16 bar.

Ordering example

A26-F, d=70mm, D=78,8mm, L=6,3mm, SKF ECOFLON 3 / NBR70

Wiper A26-F	**70 x 78,8 x 6,3**	**SKF ECOFLON 3 / NBR70**
Profile	d x D x L	Sealing material / Energizer

Seal data sheet

Wipers

A27-F

Seal housing

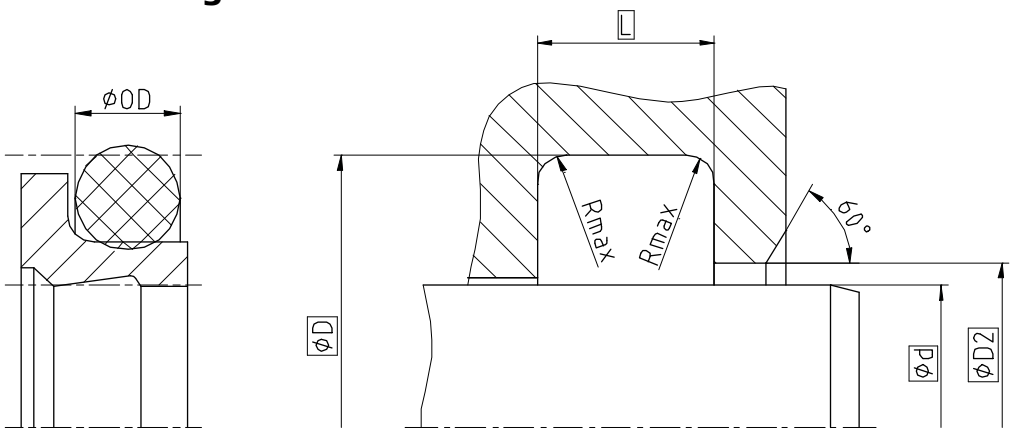

	PU		PTFE	
Surface roughness	Rtmax	Ra	Rtmax	Ra
Sliding Surface	≤ 2,5 µm	0,1...0,5 µm	≤ 2 µm	0,05...0,3 µm
Bottom of groove	≤ 6,3 µm	≤ 1,6 µm	≤ 6,3 µm	≤ 1,6 µm
Groove face	≤ 15 µm	≤ 3 µm	≤ 15 µm	≤ 3 µm

Ordering dimensions...☐

Bearing area: 50...95% and a cutting depth of 0,5xRz based on Cref = 0%

Standard dimensions

Ød f8			**ØD** H9	**ØOD**	**L** +0,2	**Rmax**	**ØD1** H11
≥ 5	...	≤ 12	d + 4,8	1,78	3,7	0,4	d + 1,5
> 12	...	< 65	d + 6,8	2,62	5,0	0,7	d + 1,5
≥ 65	...	< 180	d + 8,8	3,53	6,0	1,0	d + 1,5
> 180	...	< 300	d + 12,2	5,33	8,4	1,5	d + 2,0
> 300	...	< 650	d + 16,0	7,00	11,0	1,5	d + 2,0
> 650	...	< 1000	d + 20,0	8,40	14,0	2,0	d + 2,5
> 1000	...	< 2500	d + 27,3	10,00	16,0	2,0	d + 2,5

Operating parameters

Glide ring	Energizer	Temperature	max. speed
X-ECOPUR™	NBR70	-30 °C...+100 °C	5 m/s
XH-ECOPUR™		-20 °C...+100 °C	
XS-ECOPUR™		-20 °C...+100 °C	
G-ECOPUR 54D™		-30 °C...+100 °C	
SKF ECOFLON 1 SKF ECOFLON 2 **SKF ECOFLON 3** SKF ECOFLON 4	**NBR70**	**-30 °C...+100 °C**	**10 m/s**
	FPM75	-20 °C...+200 °C	
SKF ECOWEAR 1000	NBR70	-30 °C...+80 °C	
	MVQ70	-55 °C...+80 °C	

The stated operation conditions represent general indications. It is recommended not to use all maximum values simultaneously. Surface speed limits apply only to the presence of adequate lubrication film.
The pressure on the standard version is limited to 16 bar.

Ordering example

A27-F, d=70mm, D=78,8mm, L=6mm, SKF ECOFLON 3 / NBR70

Wiper A27-F	**70 x 78,8 x 6**	**SKF ECOFLON 3 / NBR70**
Profile	d x D x L	Sealing material / Energizer

TOP OSA

TIIVISTÄVÄ TEKIJÄ

Rod Seals

Rod Seals

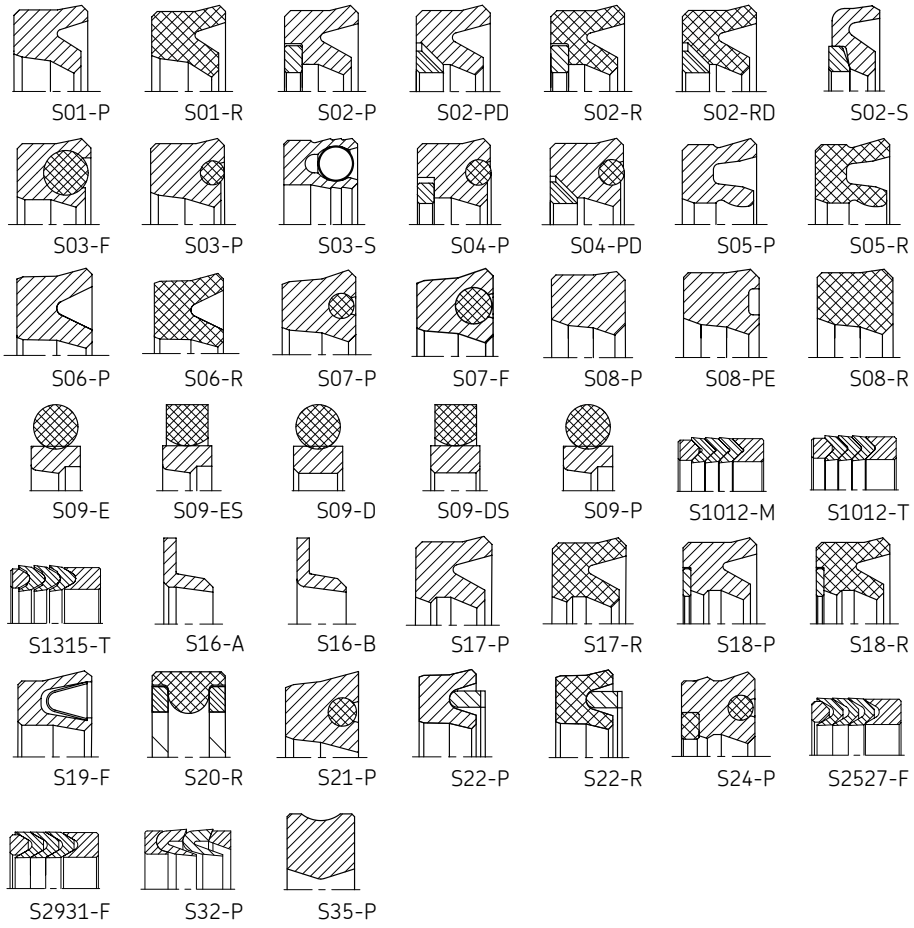
S01-P
S01-R
S02-P
S02-PD
S02-R
S02-RD
S02-S
S03-F
S03-P
S03-S
S04-P
S04-PD
S05-P
S05-R
S06-P
S06-R
S07-P
S07-F
S08-P
S08-PE
S08-R
S09-E
S09-ES
S09-D
S09-DS
S09-P
S1012-M
S1012-T
S1315-T
S16-A
S16-B
S17-P
S17-R
S18-P
S18-R
S19-F
S20-R
S21-P
S22-P
S22-R
S24-P
S2527-F
S2931-F
S32-P
S35-P

Seal data sheet

Rod seals

S01-P

Seal housing

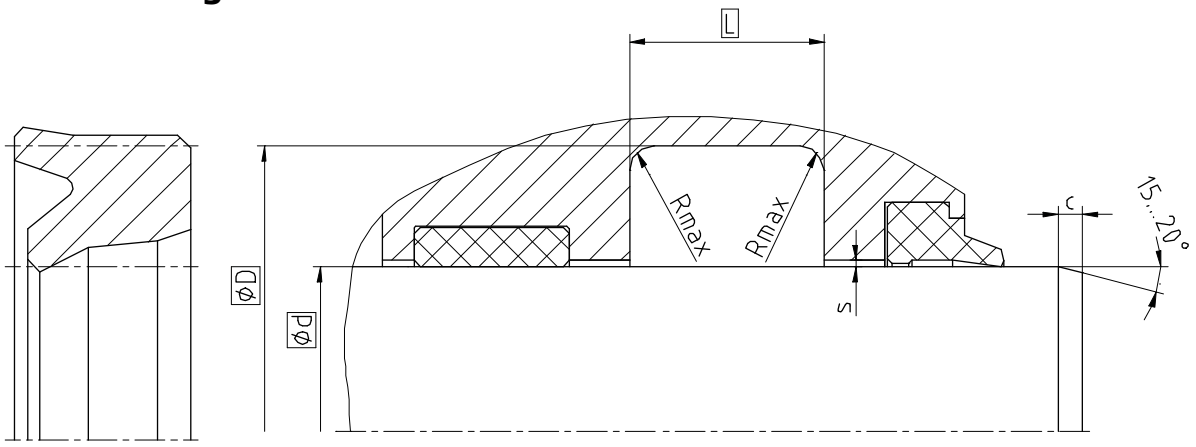

Surface roughness	Rtmax	Ra
Sliding Surface	≤ 2,5 µm	0,1...0,5 µm
Bottom of groove	≤ 6,3 µm	≤ 1,6 µm
Groove face	≤ 15 µm	≤ 3 µm

Ordering dimensions...□

Bearing area: 50...95% and a cutting depth of 0,5xRz based on Cref = 0%

Standard dimensions

Ød f8	**ØD** H10	**L** +0,2	**Rmax**	**c**	**max. radial extrusion gap s***			
					20 bar	100 bar	200 bar	400 bar
≥ 11 ... ≤ 25	d + 8	6,3	0,4	3,5	0,33	0,17	0,11	0,05
> 25 ... ≤ 50	d + 10	8,0	0,4	4,0	0,37	0,22	0,16	0,10
> 50 ... ≤ 150	d + 15	10,0	0,4	5,0	0,46	0,31	0,25	0,19
> 150 ... ≤ 300	d + 20	14,0	0,4	6,0	0,54	0,39	0,32	0,26
> 300 ... ≤ 500	d + 25	17,0	0,4	8,5	0,61	0,46	0,39	0,33
> 500 ... ≤ 700	d + 30	25,0	0,4	10,0	0,67	0,52	0,45	0,39
> 700	d + 40	32,0	0,4	13,0	0,67	0,52	0,45	0,39

***** Extrusion gap applies to a temperature of 70 °C, higher temperatures require lower values.

Operating parameters

Sealing material	Temperature	max. speed	max. pressure[1]
ECOPUR®	**-30 °C...+110 °C**	**0,5 m/s**	**400 bar (40 MPa)**
H-ECOPUR™	-20 °C...+110 °C	0,5 m/s	
S-ECOPUR™	-20 °C...+110 °C	0,7 m/s	
T-ECOPUR™	-50 °C...+110 °C	0,5 m/s	
G-ECOPUR™	-30 °C...+110 °C	0,5 m/s	

The stated operation conditions represent general indications. It is recommended not to use all maximum values simultaneously. Surface speed limits apply only to the presence of adequate lubrication film.

[1] Pressure ratings depend on the size of the extrusion gap.

Ordering example

S01-P, d=100mm, D=115mm, L=10mm, ECOPUR®

Rod Seal S01-P	**100 x 115 x 10**	**ECOPUR®**
Profile	d x D x L	Sealing material

Seal data sheet

Rod seals

S01-R

Seal housing

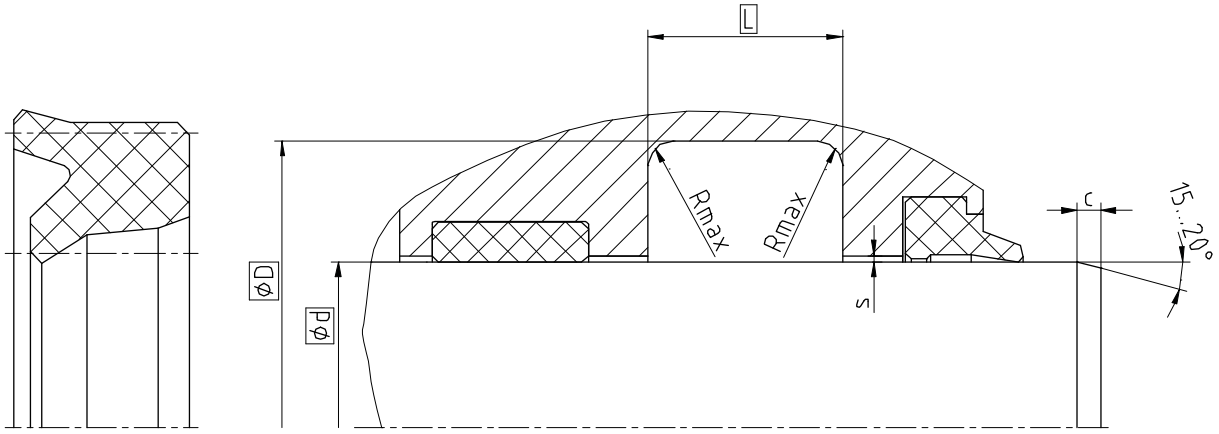

Surface roughness	Rtmax	Ra
Sliding Surface	≤ 2,5 µm	0,1...0,5 µm
Bottom of groove	≤ 6,3 µm	≤ 1,6 µm
Groove face	≤ 15 µm	≤ 3 µm

Ordering dimensions...☐

Bearing area: 50...95% and a cutting depth of 0,5xRz based on Cref = 0%

Standard dimensions

Ød f8	**ØD** H10	**L** +0,2	**Rmax**	**c**	**max. radial extrusion gap s***		
					20 bar	100 bar	160 bar
≥ 11 ... ≤ 25	d + 8	6,3	0,4	3,5	0,23	0,16	0,14
> 25 ... ≤ 50	d + 10	8,0	0,4	4,0	0,26	0,19	0,17
> 50 ... ≤ 150	d + 15	10,0	0,4	5,0	0,31	0,24	0,22
> 150 ... ≤ 300	d + 20	14,0	0,4	6,0	0,34	0,27	0,25
> 300 ... ≤ 500	d + 25	17,0	0,4	8,5	0,37	0,30	0,29
> 500 ... ≤ 700	d + 30	25,0	0,4	10,0	0,40	0,34	0,32
> 700	d + 40	32,0	0,4	13,0	0,40	0,34	0,32

* Extrusion gap applies to a temperature of 70 °C, higher temperatures require lower values.

Operating parameters

Sealing material	Temperature	max. speed	max. pressure[1]
SKF ECORUBBER-1	**-30 °C...+100 °C**	**0,5 m/s**	**160 bar (16 MPa)**
SKF ECORUBBER-2	-20 °C...+200 °C		
SKF ECORUBBER-3	-50 °C...+150 °C		
SKF ECORUBBER-H	-25 °C...+150 °C		
SKF ECOSIL	-60 °C...+200 °C	-	-
SKF ECOFLAS	-10 °C...+200 °C	0,5 m/s	160 bar (16 MPa)

The stated operation conditions represent general indications. It is recommended not to use all maximum values simultaneously. Surface speed limits apply only to the presence of adequate lubrication film.

[1] Pressure ratings depend on the size of the extrusion gap.

Ordering example

S01-R, d=100mm, D=115mm, L=10mm, SKF ECORUBBER-1

Rod Seal S01-R	**100 x 115 x 10**	**SKF ECORUBBER-1**
Profile	d x D x L	Sealing material

Seal data sheet

Rod seals

S02-P

Seal housing

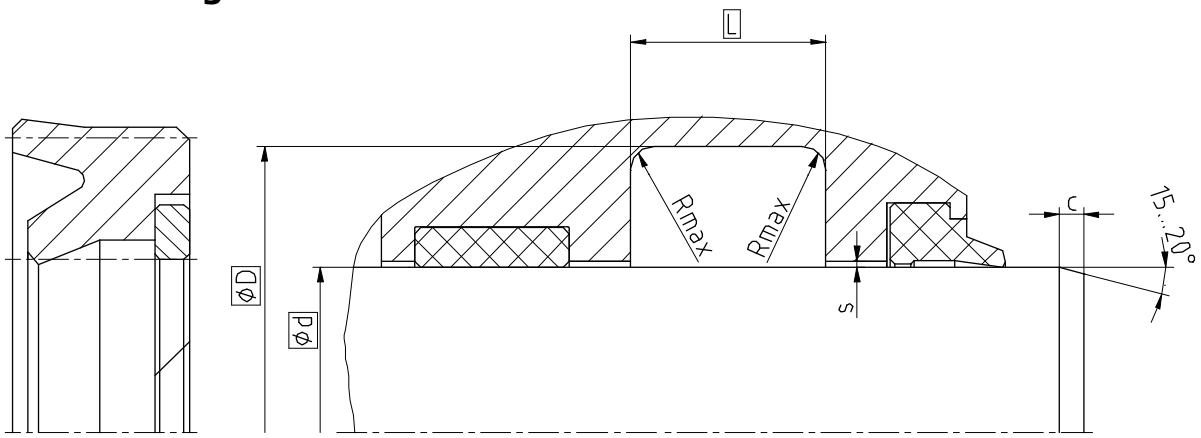

Surface roughness	Rtmax	Ra
Sliding Surface	≤ 2,5 µm	0,1...0,5 µm
Bottom of groove	≤ 6,3 µm	≤ 1,6 µm
Groove face	≤ 15 µm	≤ 3 µm

Ordering dimensions...☐

Bearing area: 50...95% and a cutting depth of 0,5xRz based on Cref = 0%

Standard dimensions

Ød f8	**ØD** H10	**L** +0,2	**Rmax**	**c**	**max. radial extrusion gap s***			
					20 bar	100 bar	400 bar	700 bar
≥ 23 ... ≤ 25	d + 8	6,3	0,4	3,5	0,80	0,80	0,30	0,04
> 25 ... ≤ 50	d + 10	8,0	0,4	4,0	1,00	1,00	0,37	0,04
> 50 ... ≤ 150	d + 15	10,0	0,4	5,0	1,50	1,47	0,46	0,05
> 150 ... ≤ 300	d + 20	14,0	0,4	6,0	2,00	1,77	0,54	0,06
> 300 ... ≤ 500	d + 25	17,0	0,4	8,5	2,50	2,06	0,62	0,06
> 500 ... ≤ 700	d + 30	25,0	0,4	10,0	3,00	2,43	0,76	0,06
> 700	d + 40	32,0	0,4	13,0	3,00	2,43	0,76	0,06

* Extrusion gap applies to a temperature of 70 °C, higher temperatures require lower values.

Operating parameters

Sealing material	Backup ring	Temperature	max. speed	max. pressure[1]
ECOPUR®	**SKF ECOTAL** SKF ECOMID[2]	**-30 °C...+100 °C**	**0,5 m/s**	**700 bar (70 MPa)**
H-ECOPUR™		-20 °C...+100 °C	0,5 m/s	
S-ECOPUR™		-20 °C...+100 °C	0,7 m/s	
T-ECOPUR™		-40 °C...+100 °C	0,5 m/s	
G-ECOPUR™		-30 °C...+100 °C	0,5 m/s	

The stated operation conditions represent general indications. It is recommended not to use all maximum values simultaneously. Surface speed limits apply only to the presence of adequate lubrication film.

[1] Pressure ratings depend on the size of the extrusion gap.

[2] ≤ Ø260mm: SKF ECOTAL ; > Ø260mm: SKF ECOMID

Ordering example

S02-P, d=100mm, D=115mm, L=10mm, ECOPUR® / SKF ECOTAL

Rod Seal S02-P	**100 x 115 x 10**	**ECOPUR® / SKF ECOTAL**
Profile	d x D x L	Sealing material / Backup ring

Seal data sheet

Rod seals

S02-PD

Seal housing

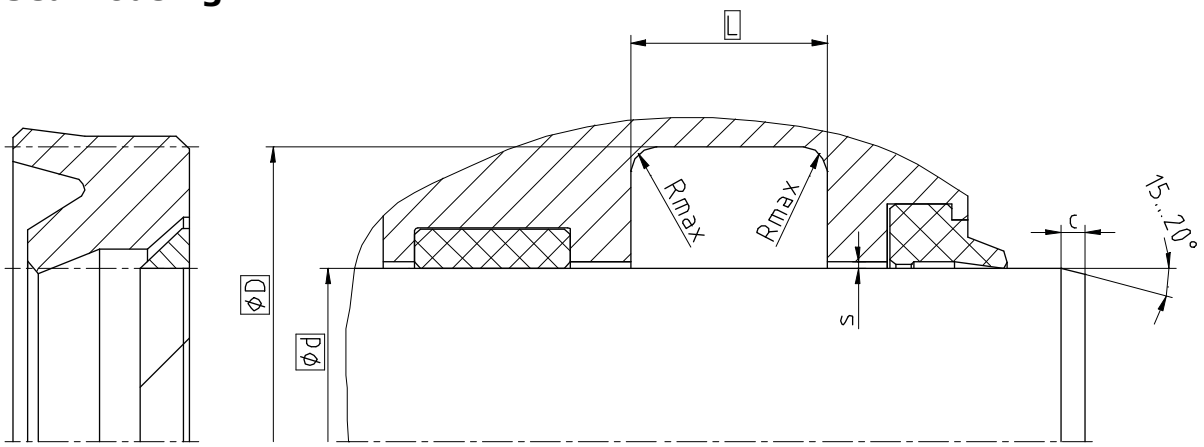

Surface roughness	Rtmax	Ra
Sliding Surface	≤ 2,5 µm	0,1...0,5 µm
Bottom of groove	≤ 6,3 µm	≤ 1,6 µm
Groove face	≤ 15 µm	≤ 3 µm

Ordering dimensions...□

Bearing area: 50...95% and a cutting depth of 0,5xRz based on Cref = 0%

Standard dimensions

Ød f8	**ØD** H10	**L** +0,2	**Rmax**	**c**	**max. radial extrusion gap s***			
					20 bar	100 bar	400 bar	700 bar
> 16 ... ≤ 25	d + 8	6,3	0,4	3,5	0,80	0,80	0,30	0,04
> 25 ... ≤ 50	d + 10	8,0	0,4	4,0	1,00	1,00	0,37	0,04
> 50 ... ≤ 150	d + 15	10,0	0,4	5,0	1,50	1,47	0,46	0,05
> 150 ... ≤ 300	d + 20	14,0	0,4	6,0	2,00	1,77	0,54	0,06
> 300 ... ≤ 500	d + 25	17,0	0,4	8,5	2,50	2,06	0,62	0,06
> 500 ... ≤ 700	d + 30	25,0	0,4	10,0	3,00	2,43	0,76	0,06
> 700	d + 40	32,0	0,4	13,0	3,00	2,43	0,76	0,06

* Extrusion gap applies to a temperature of 70 °C, higher temperatures require lower values.

Operating parameters

Sealing material	Backup ring	Temperature	max. speed	max. pressure[1]
ECOPUR®	**SKF ECOTAL** SKF ECOMID[2]	**-30 °C...+100 °C**	**0,5 m/s**	**700 bar (70 MPa)**
H-ECOPUR™		-20 °C...+100 °C	0,5 m/s	
S-ECOPUR™		-20 °C...+100 °C	0,7 m/s	
T-ECOPUR™		-40 °C...+100 °C	0,5 m/s	
G-ECOPUR™		-30 °C...+100 °C	0,5 m/s	

The stated operation conditions represent general indications. It is recommended not to use all maximum values simultaneously. Surface speed limits apply only to the presence of adequate lubrication film.

[1] Pressure ratings depend on the size of the extrusion gap.

[2] ≤ Ø260mm: SKF ECOTAL ; > Ø260mm: SKF ECOMID

Ordering example

S02-PD, d=100mm, D=115mm, L=10mm, ECOPUR® / SKF ECOTAL

Rod Seal S02-PD	**100 x 115 x 10**	**ECOPUR® / SKF ECOTAL**
Profile	d x D x L	Sealing material / Backup ring

Seal data sheet

Rod seals

S02-R

Seal housing

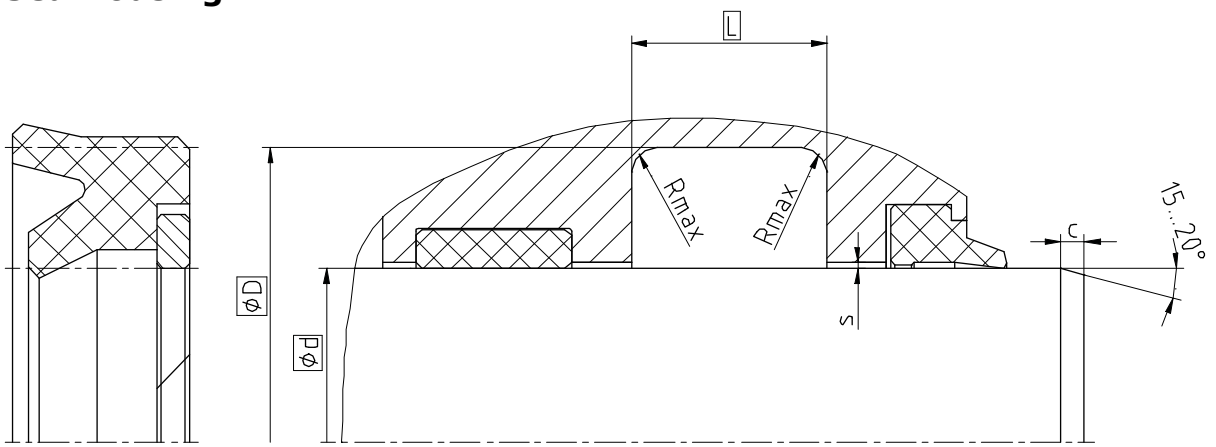

Surface roughness	Rtmax	Ra
Sliding Surface	≤ 2,5 µm	0,1...0,5 µm
Bottom of groove	≤ 6,3 µm	≤ 1,6 µm
Groove face	≤ 15 µm	≤ 3 µm

Ordering dimensions...☐

Bearing area: 50...95% and a cutting depth of 0,5xRz based on Cref = 0%

Standard dimensions

Ød f8	**ØD** H10	**L** +0,2	**Rmax**	**c**	**max. radial extrusion gap s***		
					20 bar	100 bar	250 bar
≥ 23 ... ≤ 25	d + 8	6,3	0,4	3,5	0,60	0,80	0,52
> 25 ... ≤ 50	d + 10	8,0	0,4	4,0	1,00	1,00	0,66
> 50 ... ≤ 150	d + 15	10,0	0,4	5,0	1,50	1,40	0,78
> 150 ... ≤ 300	d + 20	14,0	0,4	6,0	2,00	1,66	0,88
> 300 ... ≤ 500	d + 25	17,0	0,4	8,5	2,50	1,91	1,00
> 500 ... ≤ 700	d + 30	25,0	0,4	10,0	3,00	2,18	1,13
> 700	d + 40	32,0	0,4	13,0	3,00	2,18	1,13

* Extrusion gap applies to a temperature of 70 °C, higher temperatures require lower values.

Operating parameters

Sealing material	Backup ring	Temperature	max. speed	max. pressure[1]
SKF ECORUBBER-1	**SKF ECOTAL** SKF ECOMID[2]	**-30 °C ... +100 °C**	**0,5 m/s**	**250 bar (25 MPa)**
SKF ECORUBBER-2	SKF ECOFLON 2	-20 °C ... +200 °C		
SKF ECORUBBER-3	SKF ECOTAL SKF ECOMID[2]	-40 °C ... +100 °C		
	SKF ECOFLON 2	-50 °C ... +150 °C		
SKF ECORUBBER-H	SKF ECOTAL SKF ECOMID[2]	-25 °C ... +100 °C		
	SKF ECOFLON 2	-25 °C ... +150 °C		
SKF ECOFLAS	SKF ECOPAEK	-10 °C ... +200 °C		

The stated operation conditions represent general indications. It is recommended not to use all maximum values simultaneously. Surface speed limits apply only to the presence of adequate lubrication film.

[1] Pressure ratings depend on the size of the extrusion gap.

[2] ≤ Ø260mm: SKF ECOTAL ; > Ø260mm: SKF ECOMID

Ordering example

S02-R, d=100mm, D=115mm, L=10mm, SKF ECORUBBER-1 / SKF ECOTAL

Rod Seal S02-R	**100 x 115 x 10**	**SKF ECORUBBER-1 / SKF ECOTAL**
Profile	d x D x L	Sealing material / Backup ring

Seal data sheet

Rod seals

S02-RD

Seal housing

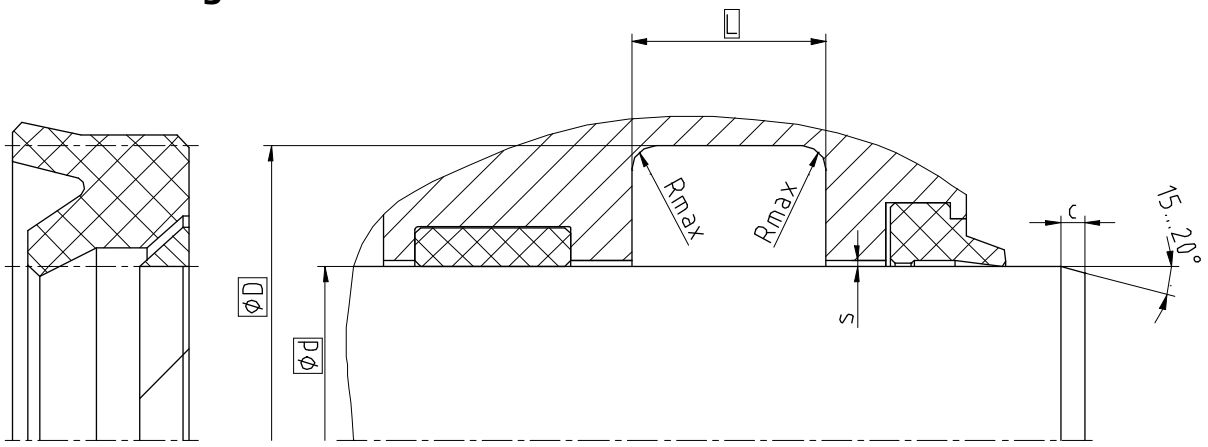

Surface roughness	Rtmax	Ra
Sliding Surface	≤ 2,5 µm	0,1...0,5 µm
Bottom of groove	≤ 6,3 µm	≤ 1,6 µm
Groove face	≤ 15 µm	≤ 3 µm

Ordering dimensions...□

Bearing area: 50...95% and a cutting depth of 0,5xRz based on Cref = 0%

Standard dimensions

Ød f8	**ØD** H10	**L** +0,2	**Rmax**	**c**	**max. radial extrusion gap s***		
					20 bar	100 bar	250 bar
> 16 ... ≤ 25	d + 8	6,3	0,4	3,5	0,60	0,80	0,52
> 25 ... ≤ 50	d + 10	8,0	0,4	4,0	1,00	1,00	0,66
> 50 ... ≤ 150	d + 15	10,0	0,4	5,0	1,50	1,40	0,78
> 150 ... ≤ 300	d + 20	14,0	0,4	6,0	2,00	1,66	0,88
> 300 ... ≤ 500	d + 25	17,0	0,4	8,5	2,50	1,91	1,00
> 500 ... ≤ 700	d + 30	25,0	0,4	10,0	3,00	2,18	1,13
> 700	d + 40	32,0	0,4	13,0	3,00	2,18	1,13

* Extrusion gap applies to a temperature of 70 °C, higher temperatures require lower values.

Operating parameters

Sealing material	Backup ring	Temperature	max. speed	max. pressure[1]
SKF ECORUBBER-1	**SKF ECOTAL** SKF ECOMID[2]	**-30 °C ... +100 °C**	**0,5 m/s**	**250 bar (25 MPa)**
SKF ECORUBBER-2	SKF ECOFLON 2	-20 °C ... +200 °C		
SKF ECORUBBER-3	SKF ECOTAL SKF ECOMID[2]	-40 °C ... +100 °C		
	SKF ECOFLON 2	-50 °C ... +150 °C		
SKF ECORUBBER-H	SKF ECOTAL SKF ECOMID[2]	-25 °C ... +100 °C		
	SKF ECOFLON 2	-25 °C ... +150 °C		
SKF ECOFLAS	SKF ECOPAEK	-10 °C ... +200 °C		

The stated operation conditions represent general indications. It is recommended not to use all maximum values simultaneously. Surface speed limits apply only to the presence of adequate lubrication film.

[1] Pressure ratings depend on the size of the extrusion gap.

[2] ≤ Ø260mm: SKF ECOTAL ; > Ø260mm: SKF ECOMID

Ordering example

S02-RD, d=100mm, D=115mm, L=10mm, SKF ECORUBBER-1 / SKF ECOTAL

Rod Seal S02-RD	**100 x 115 x 10**	**SKF ECORUBBER-1 / SKF ECOTAL**
Profile	d x D x L	Sealing material / Backup ring

Seal data sheet

Rod seals

S02-S

Seal housing

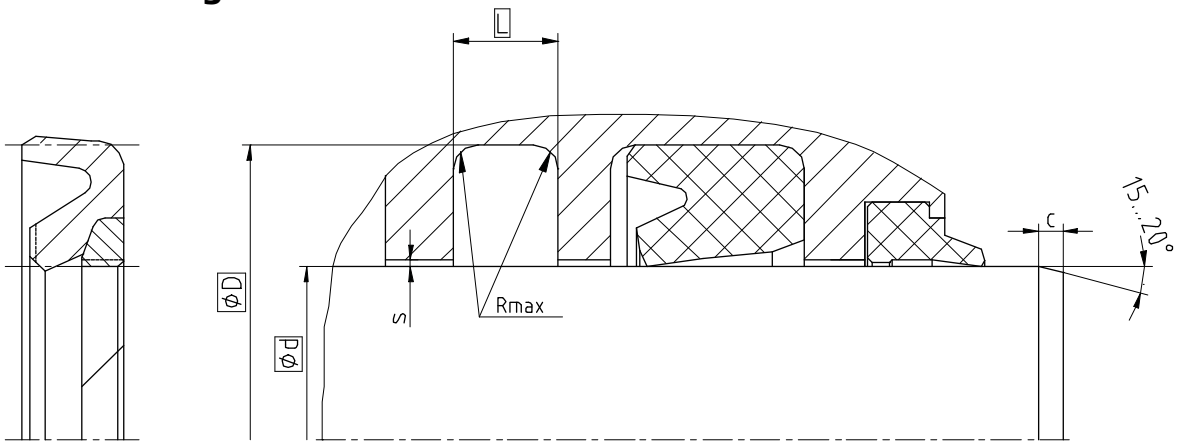

Surface roughness	Rtmax	Ra
Sliding Surface	≤ 2,5 µm	0,1...0,5 µm
Bottom of groove	≤ 6,3 µm	≤ 1,6 µm
Groove face	≤ 15 µm	≤ 3 µm

Ordering dimensions...□

Bearing area: 50...95% and a cutting depth of 0,5xRz based on Cref = 0%

Standard dimensions

Ød f8	**ØD** H10	**L** +0,2	**Rmax**	**c**	**ØOD**	**max. radial extrusion gap s***			
						100 bar	200 bar	400 bar	600 bar
> 4 ... ≤ 8	d + 4,9	2,2	0,4	2,5	1,78	0,30	0,20	0,15	0,05
> 8 ... ≤ 19	d + 7,3	3,2	0,6	3,5	2,62	0,40	0,25	0,15	0,05
> 19 ... ≤ 38	d + 10,7	4,2	1,0	4,5	3,53	0,40	0,25	0,20	0,10
> 38 ... ≤ 200	d + 15,1	6,3	1,3	5,0	5,33	0,50	0,30	0,20	0,10
> 200 ... ≤ 256	d + 20,5	8,1	1,8	6,0	7,00	0,60	0,35	0,25	0,15
> 256 ... ≤ 600	d + 24,0	8,1	1,8	8,0	7,00	0,60	0,35	0,25	0,15

* Extrusion gap applies to a temperature of 70 °C, higher temperatures require lower values.

Operating parameters

Sealing material	Backup ring	Temperature	max. speed	max. pressure[1]
ECOPUR®	**SKF ECOTAL** SKF ECOMID[2]	**-30 °C...+100 °C**	**5 m/s**	**400 bar (40 MPa)**
H-ECOPUR™		-20 °C...+100 °C	5 m/s	
S-ECOPUR™		-20 °C...+100 °C	7 m/s	
T-ECOPUR™		-40 °C...+100 °C	5 m/s	

The stated operation conditions represent general indications. It is recommended not to use all maximum values simultaneously. Surface speed limits apply only to the presence of adequate lubrication film.

[1] Pressure ratings depend on the size of the extrusion gap.

[2] ≤ Ø260mm: SKF ECOTAL ; > Ø260mm: SKF ECOMID

Ordering example

S02-S, d=100mm, D=115mm, L=10mm, ECOPUR® / SKF ECOTAL

Rod Seal S02-S	**100 x 115 x 10**	**ECOPUR® / SKF ECOTAL**
Profile	d x D x L	Sealing material / Backup ring

Seal data sheet

Rod seals

S03-P

Seal housing

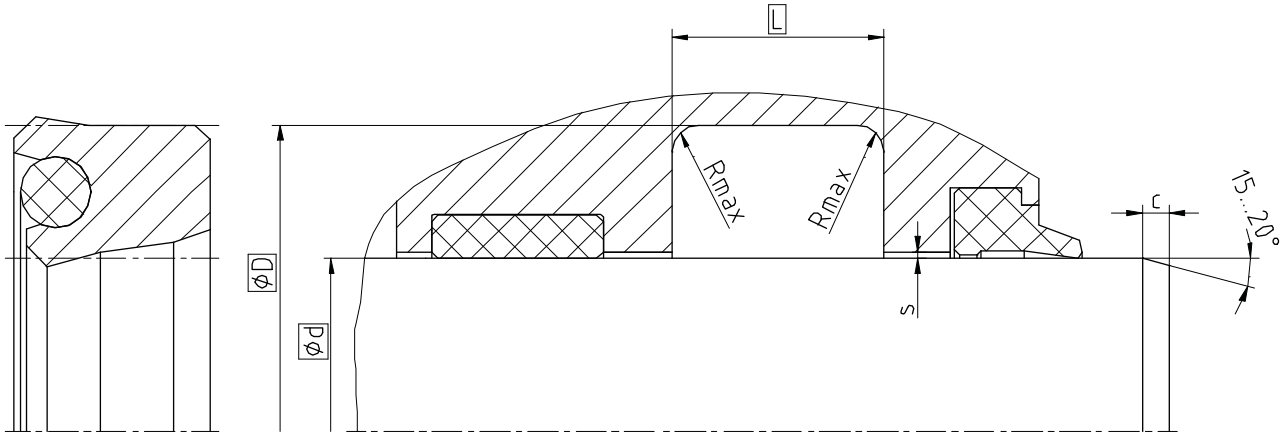

Surface roughness	Rtmax	Ra
Sliding Surface	≤ 2,5 µm	0,1...0,5 µm
Bottom of groove	≤ 6,3 µm	≤ 1,6 µm
Groove face	≤ 15 µm	≤ 3 µm

Ordering dimensions...☐

Bearing area: 50...95% and a cutting depth of 0,5xRz based on Cref = 0%

Standard dimensions

Ød f8	**ØD** H10	**L** +0,2	**Rmax**	**c**	**max. radial extrusion gap s***			
					20 bar	100 bar	200 bar	400 bar
≥ 5 ... ≤ 25	d + 8	6,3	0,4	3,5	0,33	0,18	0,10	0,05
> 25 ... ≤ 50	d + 10	8,0	0,4	4,0	0,37	0,23	0,15	0,10
> 50 ... ≤ 150	d + 15	10,0	0,4	5,0	0,46	0,33	0,25	0,18
> 150 ... ≤ 300	d + 20	14,0	0,4	6,0	0,54	0,38	0,33	0,25
> 300 ... ≤ 500	d + 25	17,0	0,4	8,5	0,61	0,45	0,40	0,33
> 500 ... ≤ 600	d + 30	25,0	0,4	10,0	0,67	0,50	0,45	0,40
> 600 ... ≤ 1000	d + 40	32,0	0,4	13,0	0,67	0,50	0,45	0,40
> 1000 ... ≤ 1600	d + 50	40,0	0,4	15,0	0,80	0,60	0,50	0,40
> 1600 ... ≤ 2000	d + 60	47,0	0,4	18,0	0,90	0,70	0,50	0,40
> 2000 ... ≤ 2500	d + 80	62,0	0,4	20,0	0,90	0,70	0,50	0,40

* Extrusion gap applies to a temperature of 70 °C, higher temperatures require lower values.

Operating parameters

Sealing material	Energizer	Temperature	max. speed	max. pressure[1]
ECOPUR®	**NBR70**	**-30 °C...+100 °C**	**0,5 m/s**	**400 bar (40 MPa)**
H-ECOPUR™		-20 °C...+100 °C		
S-ECOPUR™			0,7 m/s	
T-ECOPUR™	MVQ70	-50 °C...+110 °C	0,5 m/s	
G-ECOPUR™	NBR70	-30 °C...+100 °C	0,5 m/s	

The stated operation conditions represent general indications. It is recommended not to use all maximum values simultaneously. Surface speed limits apply only to the presence of adequate lubrication film.

[1] Pressure ratings depend on the size of the extrusion gap.

Ordering example

S03-P, d=100mm, d=115mm, L=10mm, ECOPUR® / NBR70

Rod Seal S03-P	**100 x 115 x 10**	**ECOPUR® / NBR 70**
Profile	d x D x L	Sealing material / Energizer

Seal data sheet

Rod seals

S03-F

Seal housing

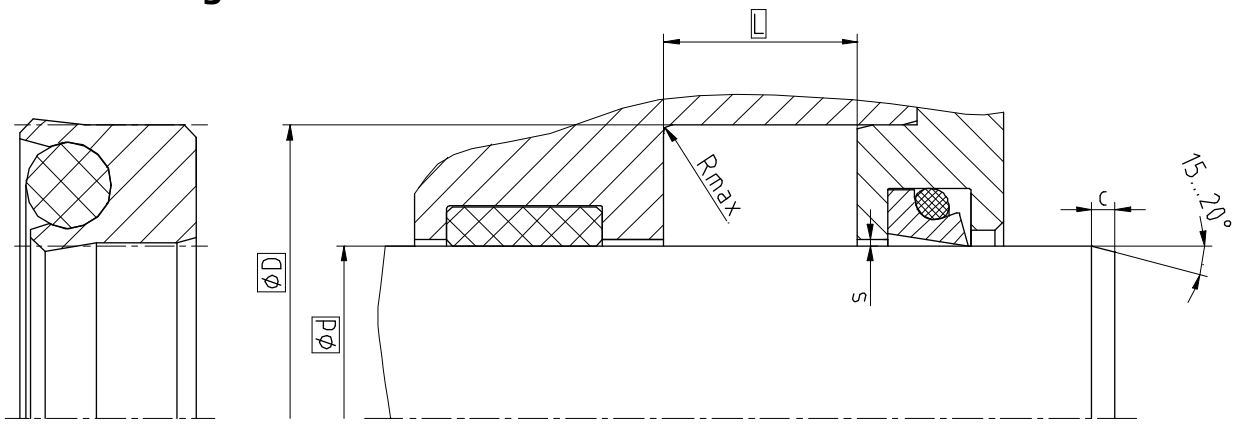

Surface roughness	Rtmax	Ra
Sliding Surface	≤ 2 µm	0,05...0,3 µm
Bottom of groove	≤ 6,3 µm	≤ 1,6 µm
Groove face	≤ 15 µm	≤ 3 µm

Ordering dimensions...☐

Bearing area: 50...95% and a cutting depth of 0,5xRz based on Cref = 0%

Standard dimensions

Ød f8	**ØD** H10	**L** +0,2	**Rmax**	**c**	**max. radial extrusion gap s***			
					20 bar	100 bar	200 bar	400 bar
≥ 5 ... ≤ 25	d + 8	6,3	0,4	3,5	0,40	0,20	0,15	0,09
> 25 ... ≤ 50	d + 10	8,0	0,4	4,0	0,45	0,22	0,17	0,10
> 50 ... ≤ 150	d + 15	10,0	0,4	5,0	0,75	0,40	0,33	0,18
> 150 ... ≤ 300	d + 20	14,0	0,4	6,0	0,87	0,48	0,38	0,20
> 300 ... ≤ 500	d + 25	17,0	0,4	8,5	0,87	0,48	0,38	0,20
> 500 ... ≤ 600	d + 30	25,0	0,4	10,0	0,87	0,48	0,38	0,20

* Extrusion gap applies to a temperature of 70 °C, higher temperatures require lower values.

Operating parameters

Sealing material	Energizer	Temperature	max. speed	max. pressure[1]
SKF ECOFLON 1 SKF ECOFLON 2 **SKF ECOFLON 3** SKF ECOFLON 4	MVQ70	-55 °C...+200 °C	**1,0 m/s**	200 bar (20 MPa)
	NBR70	-30 °C...+100 °C		**400 bar (40 MPa)**
	FPM75	**-20 °C...+200 °C**		
	EPDM70	-50 °C...+150 °C		
SKF ECOWEAR 1000	NBR70	-30 °C...+80 °C	0,5 m/s	200 bar (20 MPa)
	MVQ70	-55 °C...+80 °C		

The stated operation conditions represent general indications. It is recommended not to use all maximum values simultaneously. Surface speed limits apply only to the presence of adequate lubrication film.

[1] Pressure ratings depend on the size of the extrusion gap.

Ordering example

S03-F, d=100mm, D=115mm, L=10mm, SKF ECOFLON 3 / FPM75

Rod Seal S03-F	**100 x 115 x 10**	**SKF ECOFLON 3 / FPM75**
Profile	d x D x L	Sealing material / Energizer

Seal data sheet

Rod seals

S03-S

Seal housing

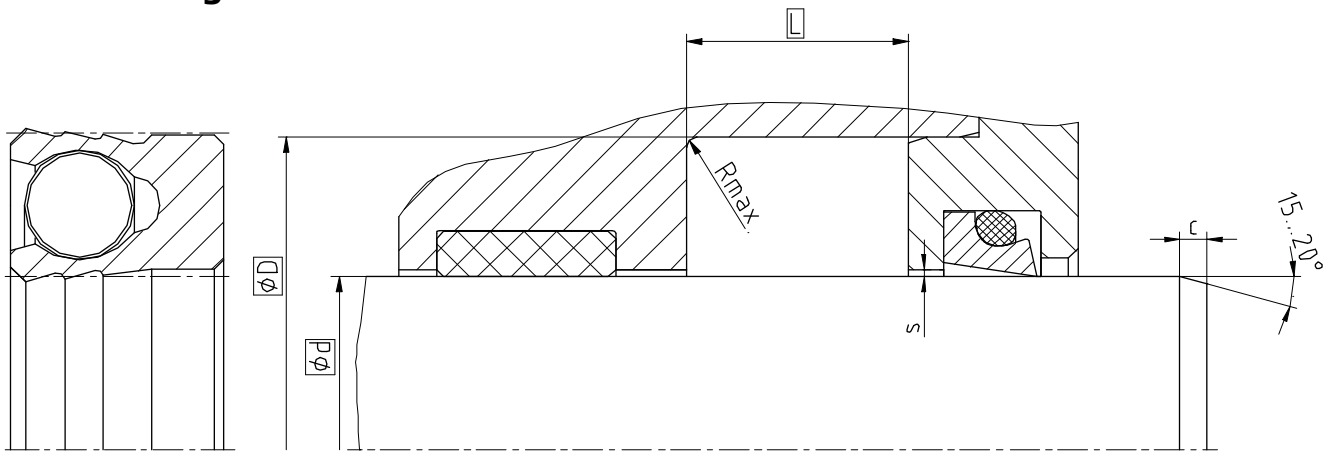

Surface roughness	Rtmax	Ra
Sliding Surface	≤ 2 µm	0,05...0,3 µm
Bottom of groove	≤ 6,3 µm	≤ 1,6 µm
Groove face	≤ 15 µm	≤ 3 µm

Ordering dimensions...☐

Bearing area: 50...95% and a cutting depth of 0,5xRz based on Cref = 0%

Standard dimensions

Ød f8	**ØD** H10	**L** +0,2	**Rmax**	**c**	**max. radial extrusion gap s***				
					20 bar	100 bar	200 bar	300 bar	400 bar
≥ 6 ... ≤ 10	d + 4	3,5	0,4	3,5	0,25	0,12	0,10	0,08	0,07
> 10 ... ≤ 30	d + 6	5,0	0,4	3,0	0,35	0,17	0,12	0,10	0,08
> 30 ... ≤ 120	d + 10	8,0	0,4	4,0	0,45	0,22	0,17	0,12	0,10
> 120 ... ≤ 200	d + 15	11,5	0,4	5,0	0,75	0,40	0,33	0,25	0,18
> 200 ... ≤ 250	d + 20	13,0	0,4	6,0	0,87	0,48	0,38	0,28	0,20
> 250 ... ≤ 500	d + 25	18,5	0,4	8,5	0,87	0,48	0,38	0,28	0,20
> 500 ... ≤ 1600	d + 30	23,0	0,4	10,0	0,87	0,48	0,38	0,28	0,20

* Extrusion gap applies to a temperature of 70 °C, higher temperatures require lower values.

Operating parameters

Sealing material	Spring	Temperature	max. speed	max. pressure[1]
SKF ECOFLON 1	**1.4310**	**-200 °C...+260 °C**	**1 m/s**	200 bar (20 MPa)
SKF ECOFLON 2 **SKF ECOFLON 3** SKF ECOFLON 4				**400 bar (40 MPa)**
SKF ECOWEAR 1000		-200 °C...+80 °C	0,5 m/s	200 bar (20 MPa)

The stated operation conditions represent general indications. It is recommended not to use all maximum values simultaneously. Surface speed limits apply only to the presence of adequate lubrication film.

[1] Pressure ratings depend on the size of the extrusion gap.

Ordering example

S03-S, d=100mm, D=110mm, L=8,0mm, SKF ECOFLON 3 / 1.4310

Rod Seal S03-S	**100 x 110 x 8**	**SKF ECOFLON 3 / 1.4310**
Profile	d x D x L	Sealing material / Spring

Seal data sheet

Rod seals

S04-P

Seal housing

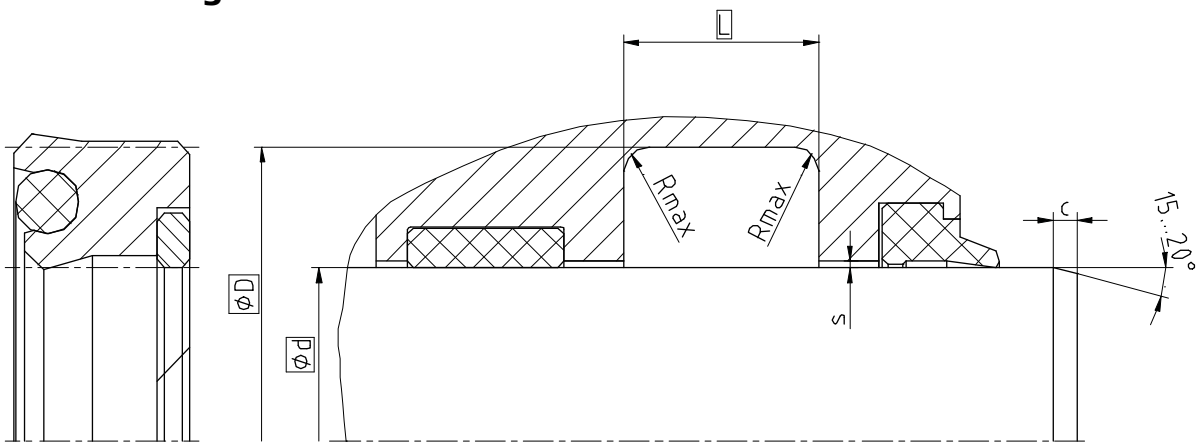

Surface roughness	Rtmax	Ra
Sliding Surface	≤ 2,5 µm	0,1...0,5 µm
Bottom of groove	≤ 6,3 µm	≤ 1,6 µm
Groove face	≤ 15 µm	≤ 3 µm

Ordering dimensions...☐

Bearing area: 50...95% and a cutting depth of 0,5xRz based on Cref = 0%

Standard dimensions

Ød f8	**ØD** H10	**L** +0,2	**Rmax**	**c**	**max. radial extrusion gap s***			
					20 bar	100 bar	400 bar	700 bar
≥ 22 ... ≤ 25	d + 8	6,3	0,4	3,5	0,80	0,80	0,30	0,04
> 25 ... ≤ 50	d + 10	8,0	0,4	4,0	1,00	1,00	0,37	0,04
> 50 ... ≤ 150	d + 15	10,0	0,4	5,0	1,50	1,47	0,46	0,05
> 150 ... ≤ 300	d + 20	14,0	0,4	6,0	2,00	1,77	0,54	0,06
> 300 ... ≤ 500	d + 25	17,0	0,4	8,5	2,50	2,06	0,62	0,06
> 500 ... ≤ 600	d + 30	25,0	0,4	10,0	3,00	2,43	0,76	0,06

* Extrusion gap applies to a temperature of 70 °C, higher temperatures require lower values.

Operating parameters

Sealing material	Energizer	Backup ring	Temperature	max. speed	max. pressure[1]
ECOPUR®	**NBR70**	**SKF ECOTAL** SKF ECOMID[2]	**-30 °C...+100 °C**	**0,5 m/s**	**700 bar (70 MPa)**
H-ECOPUR™			-20 °C...+100 °C		
S-ECOPUR™				0,7 m/s	
T-ECOPUR™	MVQ70		-40 °C...+100 °C	0,5 m/s	

The stated operation conditions represent general indications. It is recommended not to use all maximum values simultaneously. Surface speed limits apply only to the presence of adequate lubrication film.

[1] Pressure ratings depend on the size of the extrusion gap.

[2] ≤ Ø260mm: SKF ECOTAL ; > Ø260mm: SKF ECOMID

Ordering example

S04-P, d=100mm, D=115mm, L=10mm, ECOPUR® / NBR70 / SKF ECOTAL

Rod Seal S04-P (Profile) **100 x 115 x 10** (d x D x L) **ECOPUR® / NBR70 / SKF ECOTAL** (Sealing material / Energizer)

Seal data sheet

Rod seals

S04-PD

Seal housing

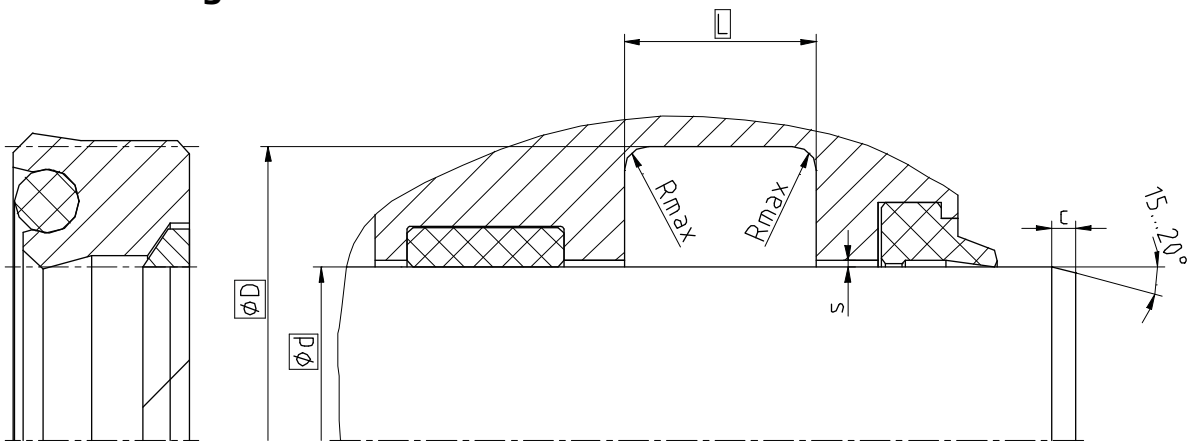

Surface roughness	Rtmax	Ra
Sliding Surface	≤ 2,5 µm	0,1...0,5 µm
Bottom of groove	≤ 6,3 µm	≤ 1,6 µm
Groove face	≤ 15 µm	≤ 3 µm

Ordering dimensions...☐

Bearing area: 50...95% and a cutting depth of 0,5xRz based on Cref = 0%

Standard dimensions

Ød f8	**ØD** H10	**L** +0,2	**Rmax**	**c**	**max. radial extrusion gap s***			
					20 bar	100 bar	400 bar	700 bar
> 16 ... ≤ 25	d + 8	6,3	0,4	3,5	0,80	0,80	0,30	0,04
> 25 ... ≤ 50	d + 10	8,0	0,4	4,0	1,00	1,00	0,37	0,04
> 50 ... ≤ 150	d + 15	10,0	0,4	5,0	1,50	1,47	0,46	0,05
> 150 ... ≤ 300	d + 20	14,0	0,4	6,0	2,00	1,77	0,54	0,06
> 300 ... ≤ 500	d + 25	17,0	0,4	8,5	2,50	2,06	0,62	0,06
> 500 ... ≤ 600	d + 30	25,0	0,4	10,0	3,00	2,43	0,76	0,06

* Extrusion gap applies to a temperature of 70 °C, higher temperatures require lower values.

Operating parameters

Sealing material	Energizer	Backup ring	Temperature	max. speed	max. pressure[1]
ECOPUR®	**NBR70**	**SKF ECOTAL** SKF ECOMID[2]	**-30 °C...+100 °C**	**0,5 m/s**	**700 bar (70 MPa)**
H-ECOPUR™			-20 °C...+100 °C		
S-ECOPUR™				0,7 m/s	
T-ECOPUR™	MVQ70		-40 °C...+100 °C	0,5 m/s	

The stated operation conditions represent general indications. It is recommended not to use all maximum values simultaneously. Surface speed limits apply only to the presence of adequate lubrication film.

[1] Pressure ratings depend on the size of the extrusion gap.

[2] ≤ Ø260mm: SKF ECOTAL ; > Ø260mm: SKF ECOMID

Ordering example

S04-PD, d=100mm, D=115mm, L=10mm, ECOPUR® / NBR70 / SKF ECOTAL

Rod Seal S04-PD	**100 x 115 x 10**	**ECOPUR® / NBR70 / SKF ECOTAL**
Profile	d x D x L	Sealing material / Energizer / Backup ring

Seal data sheet

Rod seals

S05-P

Seal housing

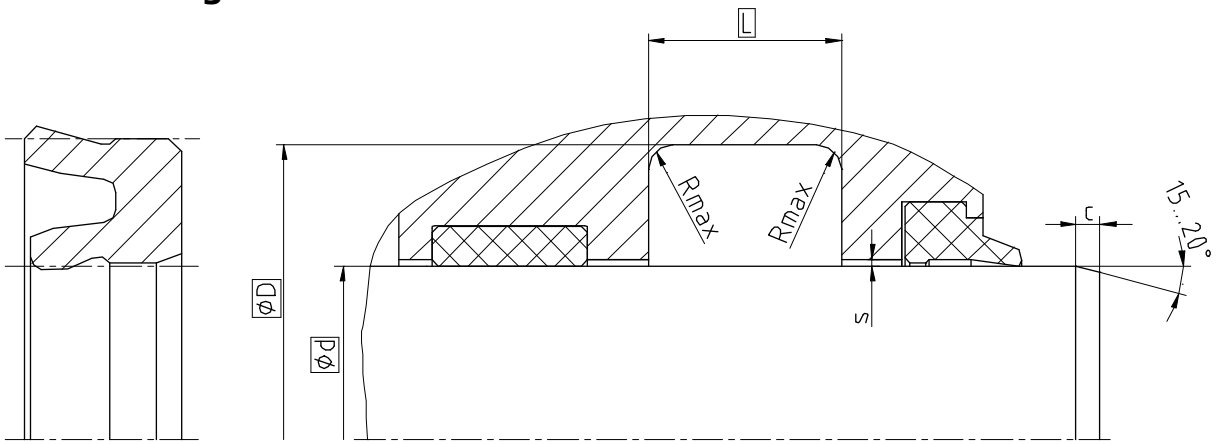

Surface roughness	Rtmax	Ra
Sliding Surface	≤ 2,5 µm	0,1...0,5 µm
Bottom of groove	≤ 6,3 µm	≤ 1,6 µm
Groove face	≤ 15 µm	≤ 3 µm

Ordering dimensions...☐

Bearing area: 50...95% and a cutting depth of 0,5xRz based on Cref = 0%

Standard dimensions

Ød f8	**ØD** H10	**L** +0,2	**Rmax**	**c**	**s***
≥ 5 ... ≤ 25	d + 8	6,3	0,4	3,5	0,33
> 25 ... ≤ 50	d + 10	8,0	0,4	4,0	0,37
> 50 ... ≤ 150	d + 12	9,0	0,4	5,0	0,46
> 150 ... ≤ 300	d + 16	14,0	0,4	6,0	0,54
> 300 ... ≤ 500	d + 20	17,0	0,4	8,5	0,61
> 500 ... ≤ 700	d + 24	25,0	0,4	10,0	0,67
> 700 ... ≤ 1000	d + 30	32,0	0,4	13,0	0,67
> 1000	d + 40	32,0	0,4	13,0	0,67

***** Extrusion gap applies to a temperature of 70 °C, higher temperatures require lower values.

Operating parameters

Sealing material	Temperature	max. speed	max. pressure[1]
ECOPUR®	**-30 °C...+110 °C**	**1 m/s**	**25 bar (2,5 MPa)**
H-ECOPUR™	-20 °C...+110 °C		
S-ECOPUR™		2 m/s	
T-ECOPUR™	-50 °C...+110 °C	1 m/s	
G-ECOPUR™	-30 °C...+110 °C		

The stated operation conditions represent general indications. It is recommended not to use all maximum values simultaneously. Surface speed limits apply only to the presence of adequate lubrication film.

Ordering example

S05-P, d=100mm, D=112mm, L=10mm, ECOPUR®

Rod Seal S05-P	**100 x 112 x 10**	**ECOPUR®**
Profile	d x D x L	Sealing material

Seal data sheet

Rod seals

S05-R

Seal housing

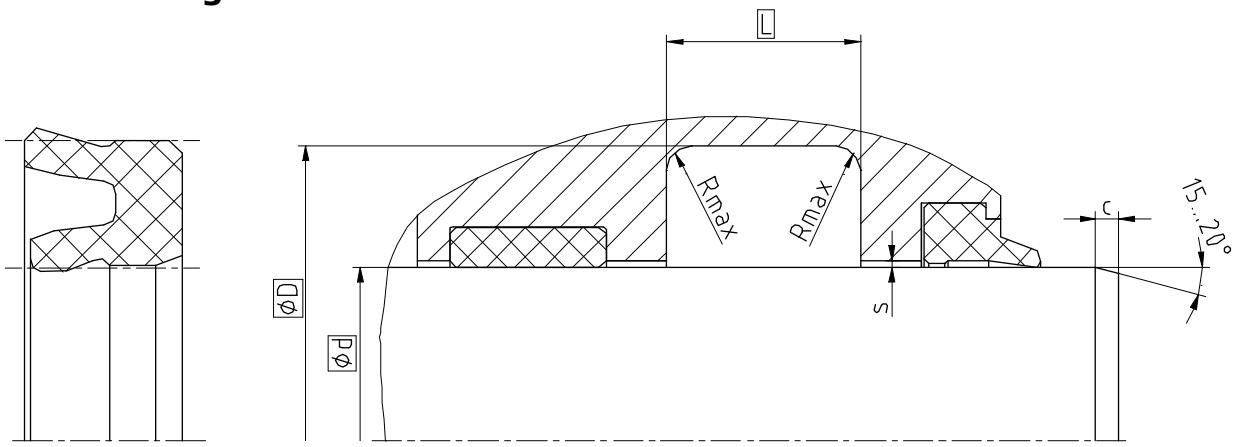

Surface roughness	Rtmax	Ra
Sliding Surface	≤ 2,5 µm	0,1...0,5 µm
Bottom of groove	≤ 6,3 µm	≤ 1,6 µm
Groove face	≤ 15 µm	≤ 3 µm

Ordering dimensions...☐

Bearing area: 50...95% and a cutting depth of 0,5xRz based on Cref = 0%

Standard dimensions

Ød f8	**ØD** H10	**L** +0,2	**Rmax**	**c**	**s***
≥ 5 ... ≤ 25	d + 8	6,3	0,4	3,5	0,33
> 25 ... ≤ 50	d + 10	8,0	0,4	4,0	0,37
> 50 ... ≤ 150	d + 12	10,0	0,4	5,0	0,46
> 150 ... ≤ 300	d + 16	14,0	0,4	6,0	0,54
> 300 ... ≤ 500	d + 20	17,0	0,4	8,5	0,61
> 500 ... ≤ 700	d + 24	25,0	0,4	10,0	0,67
> 700 ... ≤ 1000	d + 30	32,0	0,4	13,0	0,67
> 1000	d + 40	32,0	0,4	13,0	0,67

***** Extrusion gap applies to a temperature of 70 °C, higher temperatures require lower values.

Operating parameters

Sealing material	Temperature	max. speed	max. pressure
SKF ECORUBBER-1	**-30 °C...+100 °C**	**1 m/s**	**25 bar (2,5 MPa)**
SKF ECORUBBER-2	-20 °C...+200 °C		
SKF ECORUBBER-3	-50 °C...+150 °C		
SKF ECORUBBER-H	-25 °C...+150 °C		
SKF ECOFLAS	-10 °C...+200 °C		

The stated operation conditions represent general indications. It is recommended not to use all maximum values simultaneously. Surface speed limits apply only to the presence of adequate lubrication film.

Ordering example

S05-R, d=100mm, D=112 mm, L=10mm, SKF ECORUBBER-1

Rod Seal S05-R	**100 x 112 x 10**	**SKF ECORUBBER-1**
Profile	d x D x L	Sealing material

Seal data sheet

Rod seals

S06-P

Seal housing

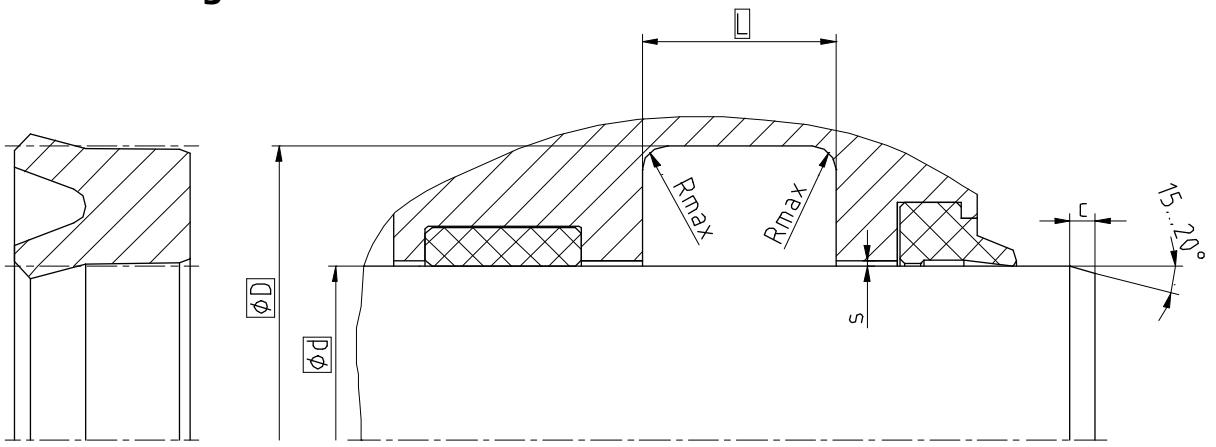

Surface roughness	Rtmax	Ra
Sliding Surface	≤ 2,5 µm	0,1...0,5 µm
Bottom of groove	≤ 6,3 µm	≤ 1,6 µm
Groove face	≤ 15 µm	≤ 3 µm

Ordering dimensions...☐

Bearing area: 50...95% and a cutting depth of 0,5xRz based on Cref = 0%

Standard dimensions

Ød f8	**ØD** H10	**L** +0,2	**Rmax**	**c**	**max. radial extrusion gap s***			
					20 bar	100 bar	200 bar	400 bar
≥ 6 ... ≤ 25	d + 8	6,3	0,4	3,5	0,33	0,17	0,11	0,05
> 25 ... ≤ 50	d + 10	8,0	0,4	4,0	0,37	0,22	0,16	0,10
> 50 ... ≤ 150	d + 15	10,0	0,4	5,0	0,46	0,31	0,25	0,19
> 150 ... ≤ 300	d + 20	14,0	0,4	6,0	0,54	0,39	0,32	0,26
> 300 ... ≤ 500	d + 25	17,0	0,4	8,5	0,61	0,46	0,39	0,33
> 500 ... ≤ 700	d + 30	25,0	0,4	10,0	0,67	0,52	0,45	0,39
> 700	d + 40	32,0	0,4	13,0	0,67	0,52	0,45	0,39

* Extrusion gap applies to a temperature of 70 °C, higher temperatures require lower values.

Operating parameters

Sealing material	Temperature	max. speed	max. pressure[1]
ECOPUR®	**-30 °C...+110 °C**	**0,5 m/s**	**400 bar (40 MPa)**
H-ECOPUR™	-20 °C...+110 °C		
S-ECOPUR™		0,7 m/s	
T-ECOPUR™	-50 °C...+110 °C	0,5 m/s	
G-ECOPUR™	-30 °C...+110 °C		

The stated operation conditions represent general indications. It is recommended not to use all maximum values simultaneously. Surface speed limits apply only to the presence of adequate lubrication film.

[1] Pressure ratings depend on the size of the extrusion gap.

Ordering example

S06-P, d=100mm, D=115mm, L=10mm, ECOPUR®

Rod Seal S06-P	**100 x 115 x 10**	**ECOPUR®**
Profile	d x D x L	Sealing material

Seal data sheet

Rod seals

S06-R

Seal housing

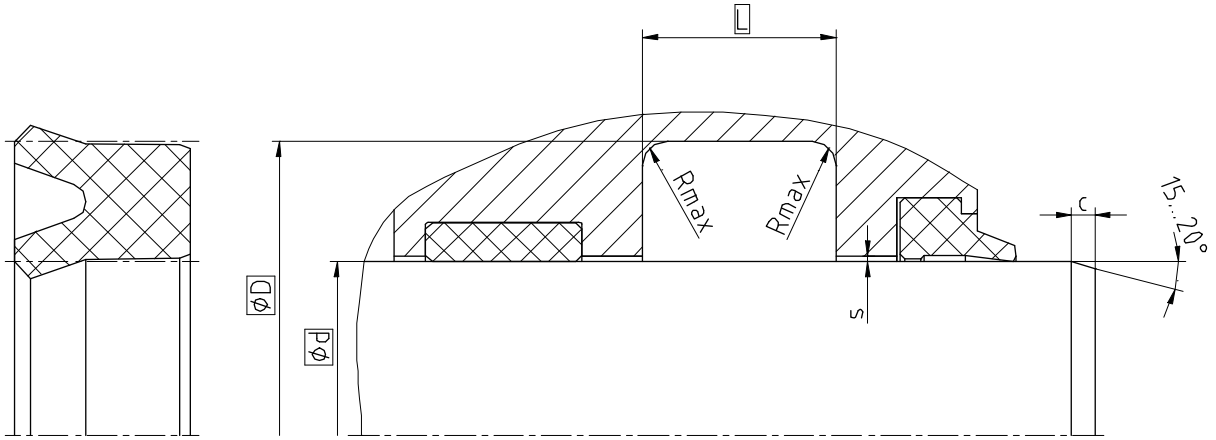

Surface roughness	Rtmax	Ra
Sliding Surface	≤ 2,5 µm	0,1...0,5 µm
Bottom of groove	≤ 6,3 µm	≤ 1,6 µm
Groove face	≤ 15 µm	≤ 3 µm

Ordering dimensions...☐

Bearing area: 50...95% and a cutting depth of 0,5xRz based on Cref = 0%

Standard dimensions

Ød f8	**ØD** H10	**L** +0,2	**Rmax**	**c**	**max. radial extrusion gap s***		
					20 bar	100 bar	160 bar
≥ 6 ... ≤ 25	d + 8	6,3	0,4	3,5	0,23	0,16	0,14
> 25 ... ≤ 50	d + 10	8,0	0,4	4,0	0,26	0,19	0,17
> 50 ... ≤ 150	d + 15	10,0	0,4	5,0	0,31	0,24	0,22
> 150 ... ≤ 300	d + 20	14,0	0,4	6,0	0,34	0,27	0,25
> 300 ... ≤ 500	d + 25	17,0	0,4	8,5	0,37	0,30	0,29
> 500 ... ≤ 700	d + 30	25,0	0,4	10,0	0,40	0,34	0,32
> 700	d + 40	32,0	0,4	13,0	0,40	0,34	0,32

* Extrusion gap applies to a temperature of 70 °C, higher temperatures require lower values.

Operating parameters

Sealing material	Temperature	max. speed	max. pressure[1]
SKF ECORUBBER-1	**-30 °C...+100 °C**	**0,5 m/s**	**160 bar (16 MPa)**
SKF ECORUBBER-2	-20 °C...+200 °C		
SKF ECORUBBER-3	-50 °C...+150 °C		
SKF ECORUBBER-H	-25 °C...+150 °C		
SKF ECOSIL	-60 °C...+200 °C	-	-
SKF ECOFLAS	-10 °C...+200 °C	0,5 m/s	160 bar (16 MPa)

The stated operation conditions represent general indications. It is recommended not to use all maximum values simultaneously. Surface speed limits apply only to the presence of adequate lubrication film.

[1] Pressure ratings depend on the size of the extrusion gap.

Ordering example

S06-R, d=100mm, D=115mm, L=10mm, SKF ECORUBBER-1

Rod Seal S06-R	**100 x 115 x 10**	**SKF ECORUBBER-1**
Profile	d x D x L	Sealing material

Seal data sheet

Rod seals

S07-P

Seal housing

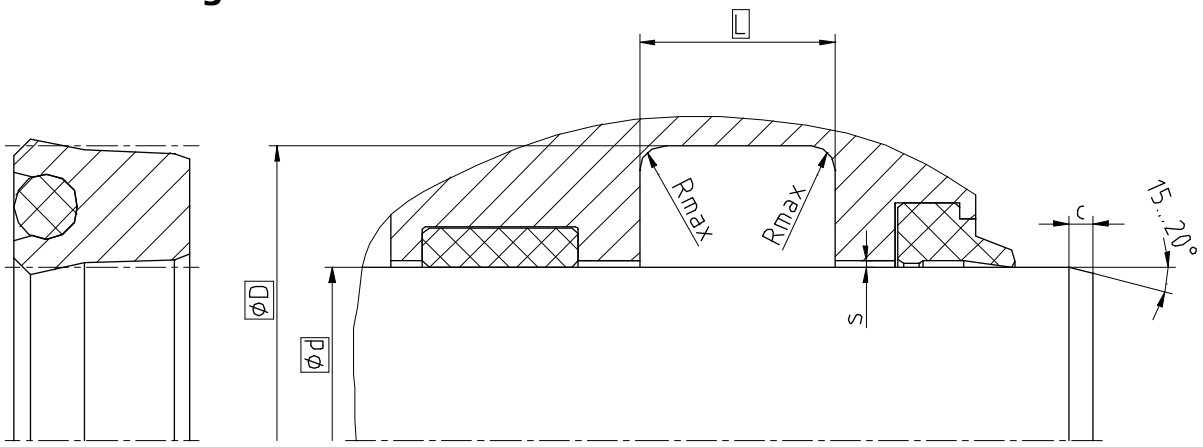

Surface roughness	Rtmax	Ra
Sliding Surface	≤ 2,5 µm	0,1...0,5 µm
Bottom of groove	≤ 6,3 µm	≤ 1,6 µm
Groove face	≤ 15 µm	≤ 3 µm

Ordering dimensions...□

Bearing area: 50...95% and a cutting depth of 0,5xRz based on Cref = 0%

Standard dimensions

Ød f8	**ØD** H10	**L** +0,2	**Rmax**	**c**	**max. radial extrusion gap s***			
					20 bar	100 bar	200 bar	400 bar
≥ 5 ... ≤ 25	d + 8	6,3	0,4	3,5	0,33	0,17	0,11	0,05
> 25 ... ≤ 50	d + 10	8,0	0,4	4,0	0,37	0,22	0,16	0,10
> 50 ... ≤ 150	d + 15	10,0	0,4	5,0	0,46	0,31	0,25	0,19
> 150 ... ≤ 300	d + 20	14,0	0,4	6,0	0,54	0,39	0,32	0,26
> 300 ... ≤ 500	d + 25	17,0	0,4	8,5	0,61	0,46	0,39	0,33
> 500 ... ≤ 600	d + 30	25,0	0,4	10,0	0,67	0,52	0,45	0,39

* Extrusion gap applies to a temperature of 70 °C, higher temperatures require lower values.

Operating parameters

Sealing material	Energizer	Temperature	max. speed	max. pressure[1]
ECOPUR®	**NBR70**	**-30 °C...+100 °C**	**0,5 m/s**	**400 bar (40 MPa)**
H-ECOPUR™		-20 °C...+100 °C		
S-ECOPUR™			0,7 m/s	
T-ECOPUR™	MVQ70	-50 °C...+110 °C	0,5 m/s	

The stated operation conditions represent general indications. It is recommended not to use all maximum values simultaneously. Surface speed limits apply only to the presence of adequate lubrication film.

[1] Pressure ratings depend on the size of the extrusion gap.

Ordering example

S07-P, d=100mm, D=115mm, L=10mm, ECOPUR / NBR70

Rod Seal S07-P	**100 x 115 x 10**	**ECOPUR® / NBR70**
Profile	d x D x L	Sealing material / Energizer

Seal data sheet

Rod seals

S07-F

Seal housing

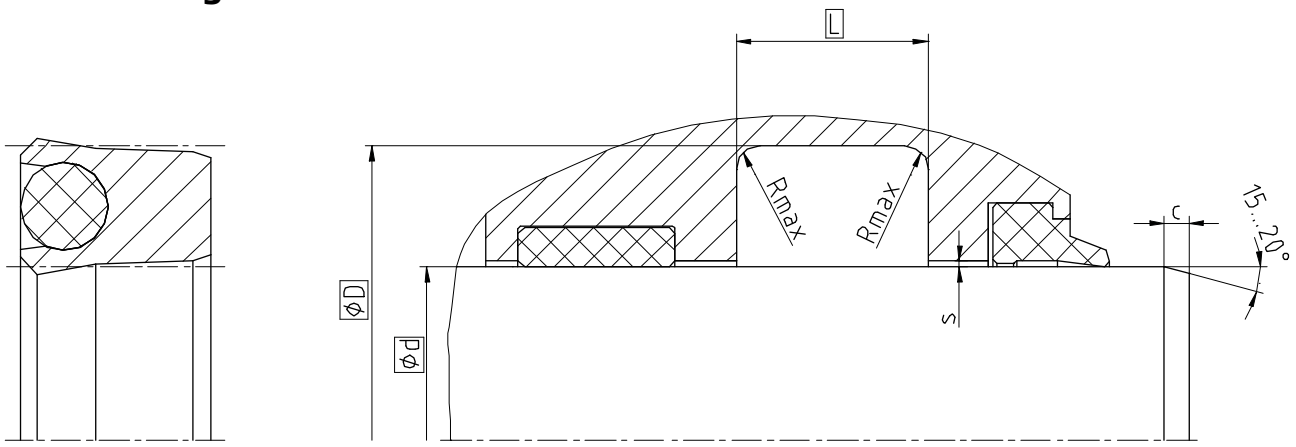

Surface roughness	Rtmax	Ra
Sliding Surface	≤ 2 µm	0,05...0,3 µm
Bottom of groove	≤ 6,3 µm	≤ 1,6 µm
Groove face	≤ 15 µm	≤ 3 µm

Ordering dimensions...☐

Bearing area: 50...95% and a cutting depth of 0,5xRz based on Cref = 0%

Standard dimensions

Ød f8	**ØD** H10	**L** +0,2	**Rmax**	**c**	**max. radial extrusion gap s***			
					20 bar	100 bar	200 bar	400 bar
≥ 5 ... ≤ 25	d + 8	6,3	0,4	3,5	0,40	0,20	0,15	0,09
> 25 ... ≤ 50	d + 10	8,0	0,4	4,0	0,45	0,22	0,17	0,10
> 50 ... ≤ 150	d + 15	10,0	0,4	5,0	0,75	0,40	0,33	0,18
> 150 ... ≤ 300	d + 20	14,0	0,4	6,0	0,87	0,48	0,38	0,20
> 300 ... ≤ 500	d + 25	17,0	0,4	8,5	0,87	0,48	0,38	0,20
> 500 ... ≤ 600	d + 30	25,0	0,4	10,0	0,87	0,48	0,38	0,20

* Extrusion gap applies to a temperature of 70 °C, higher temperatures require lower values.

Operating parameters

Sealing material	Energizer	Temperature	max. speed	max. pressure[1]
SKF ECOFLON 1 SKF ECOFLON 2 **SKF ECOFLON 3** SKF ECOFLON 4	MVQ70	-55 °C...+200 °C	**1,0 m/s**	200 bar (20 MPa)
	NBR70	-30 °C...+100 °C		**400 bar (40 MPa)**
	FPM75	**-20 °C...+200 °C**		
	EPDM70	-50 °C...+150 °C		
SKF ECOWEAR 1000	NBR70	-30 °C...+80 °C	0,5 m/s	200 bar (20 MPa)
	FPM75	-20 °C...+80 °C		
	EPDM70	-50 °C...+80 °C		
	MVQ70	-55 °C...+80 °C		

The stated operation conditions represent general indications. It is recommended not to use all maximum values simultaneously. Surface speed limits apply only to the presence of adequate lubrication film.

[1] Pressure ratings depend on the size of the extrusion gap.

Ordering example

S07-F, d=100mm, D=115mm, L=10mm, SKF ECOFLON 3 / FPM75

Rod Seal S07-F	**100 x 115 x 10**	**SKF ECOFLON 3 / FPM75**
Profile	d x D x L	Sealing material / Energizer

Seal data sheet

Rod seals

S08-P

Seal housing

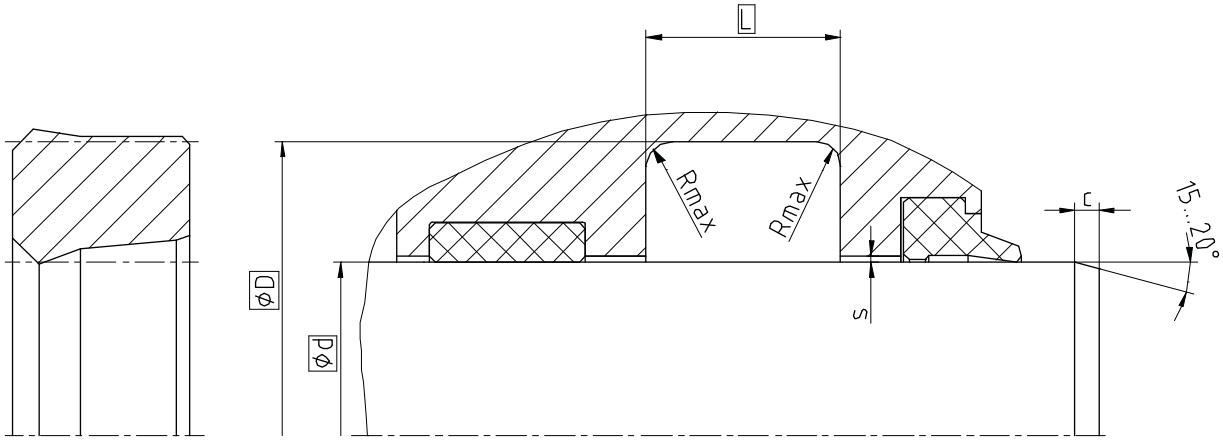

Surface roughness	Rtmax	Ra
Sliding Surface	≤ 2,5 µm	0,1...0,5 µm
Bottom of groove	≤ 6,3 µm	≤ 1,6 µm
Groove face	≤ 15 µm	≤ 3 µm

Ordering dimensions...□

Bearing area: 50...95% and a cutting depth of 0,5xRz based on Cref = 0%

Standard dimensions

Ød f8	**ØD** H10	**L** +0,2	**Rmax**	**c**	**max. radial extrusion gap s***			
					20 bar	100 bar	200 bar	400 bar
≥ 5 ... ≤ 25	d + 8	6,3	0,4	3,5	0,33	0,17	0,11	0,05
> 25 ... ≤ 50	d + 10	8,0	0,4	4,0	0,37	0,22	0,16	0,10
> 50 ... ≤ 150	d + 15	10,0	0,4	5,0	0,46	0,31	0,25	0,19
> 150 ... ≤ 300	d + 20	14,0	0,4	6,0	0,54	0,39	0,32	0,26
> 300 ... ≤ 500	d + 25	17,0	0,4	8,5	0,61	0,46	0,39	0,33
> 500 ... ≤ 600	d + 30	25,0	0,4	10,0	0,67	0,52	0,45	0,39
> 600	d + 40	32,0	0,4	13,0	0,67	0,52	0,45	0,39

* Extrusion gap applies to a temperature of 70 °C, higher temperatures require lower values.

Operating parameters

Sealing material	Temperature	max. speed	max. pressure[1]
ECOPUR®	**-30 °C...+110 °C**	**0,3 m/s**	**400 bar (40 MPa)**
H-ECOPUR™	-20 °C...+110 °C	0,3 m/s	
S-ECOPUR™	-20 °C...+110 °C	0,4 m/s	
T-ECOPUR™	-50 °C...+110 °C	0,3 m/s	

The stated operation conditions represent general indications. It is recommended not to use all maximum values simultaneously. Surface speed limits apply only to the presence of adequate lubrication film.

[1] Pressure ratings depend on the size of the extrusion gap.

Ordering example

S08-P, d=100mm, D=115mm, L=10mm, ECOPUR®

Rod Seal S08-P	**100 x 115 x 10**	**ECOPUR®**
Profile	d x D x L	Sealing material

Seal data sheet

Rod seals

S08-PE

Seal housing

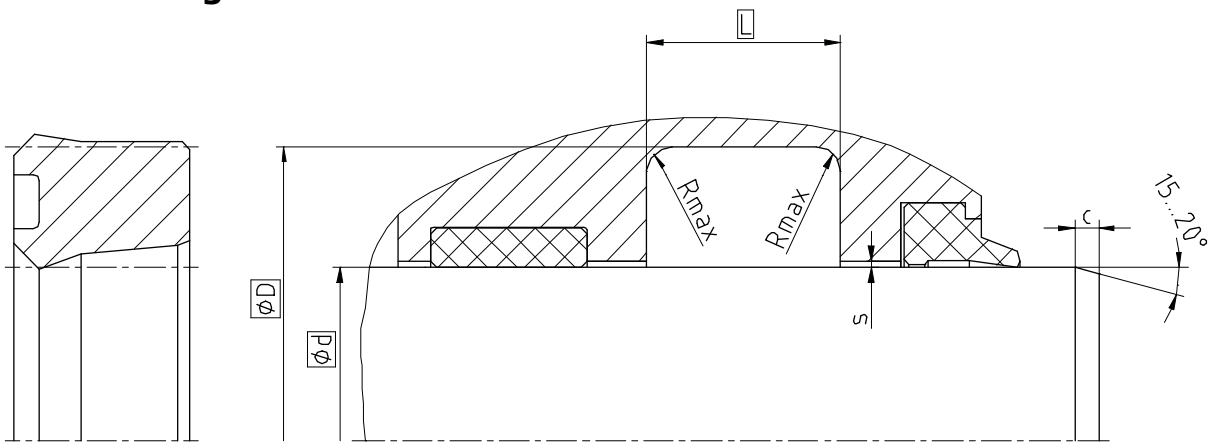

Surface roughness	Rtmax	Ra
Sliding Surface	≤ 2,5 µm	0,1...0,5 µm
Bottom of groove	≤ 6,3 µm	≤ 1,6 µm
Groove face	≤ 15 µm	≤ 3 µm

Ordering dimensions...□

Bearing area: 50...95% and a cutting depth of 0,5xRz based on Cref = 0%

Standard dimensions

Ød f8	**ØD** H10	**L** +0,2	**Rmax**	**c**	**max. radial extrusion gap s***			
					20 bar	100 bar	200 bar	400 bar
≥ 5 ... ≤ 25	d + 8	6,3	0,4	3,5	0,33	0,17	0,11	0,05
> 25 ... ≤ 50	d + 10	8,0	0,4	4,0	0,37	0,22	0,16	0,10
> 50 ... ≤ 150	d + 15	10,0	0,4	5,0	0,46	0,31	0,25	0,19
> 150 ... ≤ 300	d + 20	14,0	0,4	6,0	0,54	0,39	0,32	0,26
> 300 ... ≤ 500	d + 25	17,0	0,4	8,5	0,61	0,46	0,39	0,33
> 500 ... ≤ 600	d + 30	25,0	0,4	10,0	0,67	0,52	0,45	0,39

* Extrusion gap applies to a temperature of 70 °C, higher temperatures require lower values.

Operating parameters

Sealing material	Temperature	max. speed	max. pressure[1]
ECOPUR®	**-30 °C...+110 °C**	**0,3 m/s**	**400 bar (40 MPa)**
H-ECOPUR™	-20 °C...+110 °C	0,3 m/s	
S-ECOPUR™	-20 °C...+110 °C	0,4 m/s	
T-ECOPUR™	-50 °C...+110 °C	0,3 m/s	

The stated operation conditions represent general indications. It is recommended not to use all maximum values simultaneously. Surface speed limits apply only to the presence of adequate lubrication film.

[1] Pressure ratings depend on the size of the extrusion gap.

Ordering example

S08-PE, d=100mm, D=115mm, L=10mm, ECOPUR®

Rod Seal S08-PE	**100 x 115 x 10**	**ECOPUR®**
Profile	d x D x L	Sealing material

Seal data sheet

Rod seals

S08-R

Seal housing

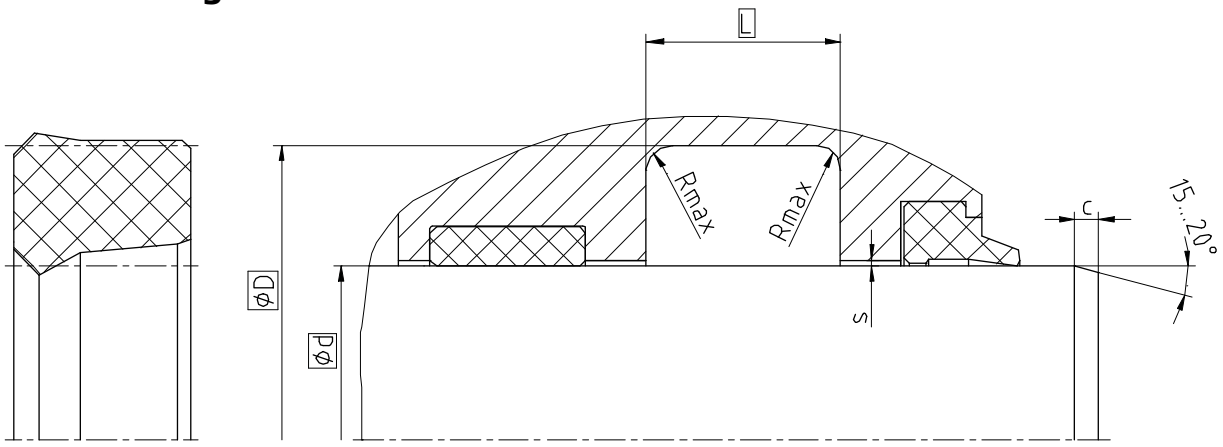

Surface roughness	Rtmax	Ra
Sliding Surface	≤ 2,5 µm	0,1...0,5 µm
Bottom of groove	≤ 6,3 µm	≤ 1,6 µm
Groove face	≤ 15 µm	≤ 3 µm

Ordering dimensions...□

Bearing area: 50...95% and a cutting depth of 0,5xRz based on Cref = 0%

Standard dimensions

Ød f8	**ØD** H10	**L** +0,2	**Rmax**	**c**	**max. radial extrusion gap s***		
					20 bar	100 bar	160 bar
≥ 5 ... ≤ 25	d + 8	6,3	0,4	3,5	0,23	0,16	0,14
> 25 ... ≤ 50	d + 10	8,0	0,4	4,0	0,26	0,19	0,17
> 50 ... ≤ 150	d + 15	10,0	0,4	5,0	0,31	0,24	0,22
> 150 ... ≤ 300	d + 20	14,0	0,4	6,0	0,34	0,27	0,25
> 300 ... ≤ 500	d + 25	17,0	0,4	8,5	0,37	0,30	0,29
> 500 ... ≤ 600	d + 30	25,0	0,4	10,0	0,40	0,34	0,32

* Extrusion gap applies to a temperature of 70 °C, higher temperatures require lower values.

Operating parameters

Sealing material	Temperature	max. speed	max. pressure[1]
SKF ECORUBBER-1	**-30 °C...+100 °C**	**0,3 m/s**	**160 bar (16 MPa)**
SKF ECORUBBER-2	-20 °C...+200 °C		
SKF ECORUBBER-3	-50 °C...+150 °C		
SKF ECORUBBER-H	-25 °C...+150 °C		
SKF ECOFLAS	-10 °C...+200°C		

The stated operation conditions represent general indications. It is recommended not to use all maximum values simultaneously. Surface speed limits apply only to the presence of adequate lubrication film.

[1] Pressure ratings depend on the size of the extrusion gap.

Ordering example

S08-R, d=100mm, D=115mm, L=10mm, SKF ECORUBBER-1

Rod Seal S08-R	**100 x 115 x 10**	**SKF ECORUBBER-1**
Profile	d x D x L	Sealing material

Seal data sheet

Rod seals

S09-E **X-Slide**

Seal housing

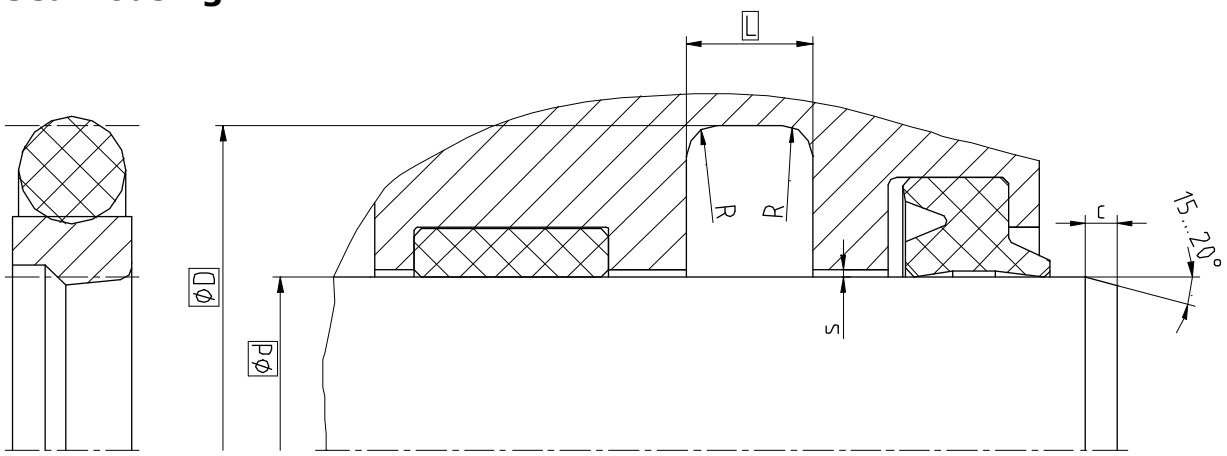

Surface roughness	Rtmax	Ra
Sliding Surface	≤ 2,5 µm	0,1...0,5 µm
Bottom of groove	≤ 6,3 µm	≤ 1,6 µm
Groove face	≤ 15 µm	≤ 3 µm

Ordering dimensions...□

Bearing area: 50...95% and a cutting depth of 0,5xRz based on Cref = 0%

Standard dimensions

Ød f8	**ØD** H10	**L** +0,2	**R**	**c**	**ØOD**	**max. radial extrusion gap s***			
						100 bar	200 bar	400 bar	600 bar
> 4 ... ≤ 8	d + 4,9	2,2	0,4	2,5	1,78	0,30	0,30	0,20	0,10
> 8 ... ≤ 19	d + 7,3	3,2	0,6	3,5	2,62	0,40	0,30	0,20	0,10
> 19 ... ≤ 38	d + 10,7	4,2	1,0	4,5	3,53	0,50	0,40	0,30	0,20
> 38 ... ≤ 200	d + 15,1	6,3	1,3	5,0	5,33	0,50	0,40	0,30	0,20
> 200 ... ≤ 256	d + 20,5	8,1	1,8	6,0	7,00	0,70	0,50	0,40	0,20
> 256 ... ≤ 650	d + 24,0	8,1	1,8	8,0	7,00	0,70	0,50	0,40	0,20
> 650 ... ≤ 1000	d + 27,3	9,5	2,5	10,0	8,40	0,80	0,70	0,50	0,30
> 1000 ... ≤ 3000	d + 38,0	13,8	3,0	12,0	12,00	1,10	0,80	0,70	0,40

***** Extrusion gap applies to a temperature of 80 °C, higher temperatures require lower values.

Operating parameters

Glide ring	Energizer	Temperature	max. speed	max. pressure[1]
X-ECOPUR™ XH-ECOPUR™ XS-ECOPUR™ G-ECOPUR 54D™	**NBR70**	**-30 °C...+100 °C**	**5 m/s**	**600 bar (60 MPa)**
	MVQ70	-55 °C...+110 °C		
SKF ECOWEAR 1000	NBR70	-30 °C...+80 °C		400 bar (40 MPa)
	MVQ70	-55 °C...+80 °C		

The stated operation conditions represent general indications. It is recommended not to use all maximum values simultaneously. Surface speed limits apply only to the presence of adequate lubrication film.

[1] Pressure ratings depend on the size of the extrusion gap.

Ordering example

X-Slide S09-E, d=100mm, D=115,1mm, L=6,3mm, X-ECOPUR™ / NBR70

X-Slide S09-E	**100 x 115,1 x 6,3**	**X-ECOPUR™ / NBR70**
Profile	d x D x L	Sealing material / Energizer

Seal data sheet

Rod seals

S09-E F-Slide

Seal housing

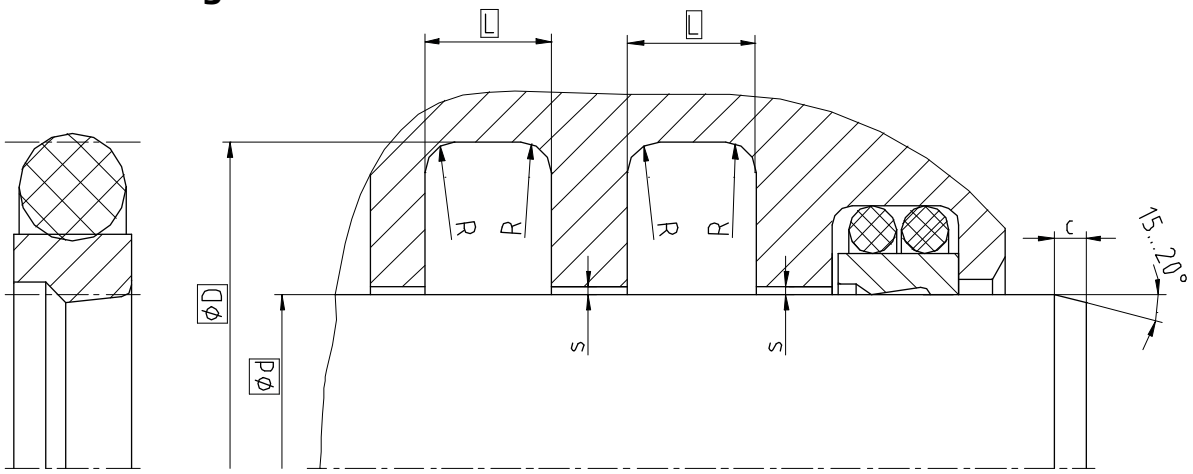

Surface roughness	Rtmax	Ra
Sliding Surface	≤ 2,5 µm	0,1...0,5 µm
Bottom of groove	≤ 6,3 µm	≤ 1,6 µm
Groove face	≤ 15 µm	≤ 3 µm

Ordering dimensions...☐

Bearing area: 50...95% and a cutting depth of 0,5xRz based on Cref = 0%

Standard dimensions

Ød f8	**ØD** H10	**L** +0,2	**R**	**c**	**ØOD**	**max. radial extrusion gap s***			
						100 bar	200 bar	400 bar	600 bar
> 4 ... ≤ 8	d + 4,9	2,2	0,4	2,5	1,78	0,30	0,20	0,15	0,05
> 8 ... ≤ 19	d + 7,3	3,2	0,6	3,5	2,62	0,40	0,25	0,15	0,05
> 19 ... ≤ 38	d + 10,7	4,2	1,0	4,5	3,53	0,40	0,25	0,20	0,10
> 38 ... ≤ 200	d + 15,1	6,3	1,3	5,0	5,33	0,50	0,30	0,20	0,10
> 200 ... ≤ 256	d + 20,5	8,1	1,8	6,0	7,00	0,60	0,35	0,25	0,15
> 256 ... ≤ 650	d + 24,0	8,1	1,8	8,0	7,00	0,60	0,35	0,25	0,15
> 650 ... ≤ 1000	d + 27,3	9,5	2,5	10,0	8,40	0,70	0,50	0,30	0,20
> 1000 ... ≤ 2000	d + 38,0	13,8	3,0	12,0	12,00	1,00	0,70	0,60	0,30

***** Extrusion gap applies to a temperature of 80 °C, higher temperatures require lower values.

Operating parameters

Glide ring	Energizer	Temperature	max. speed	max. pressure[1]
SKF ECOFLON 2 SKF ECOFLON 3 **SKF ECOFLON 3F** SKF ECOFLON 4	**NBR70**	**-30 °C...+100 °C**	**10 m/s**	**600 bar (60 MPa)**
	FPM70	-20 °C...+200 °C		

The stated operation conditions represent general indications. It is recommended not to use all maximum values simultaneously. Surface speed limits apply only to the presence of adequate lubrication film.

[1] Pressure ratings depend on the size of the extrusion gap.

Ordering example

F-Slide S09-E, d=100mm, D=115,1mm, L=6,3mm, SKF ECOFLON 3F / NBR70

F-Slide S09-E	**100 x 115,1 x 6,3**	**SKF ECOFLON 3F / NBR70**
Profile	d x D x L	Sealing material / Energizer

Seal data sheet

Rod seals

S09-ES X-Slide

Seal housing

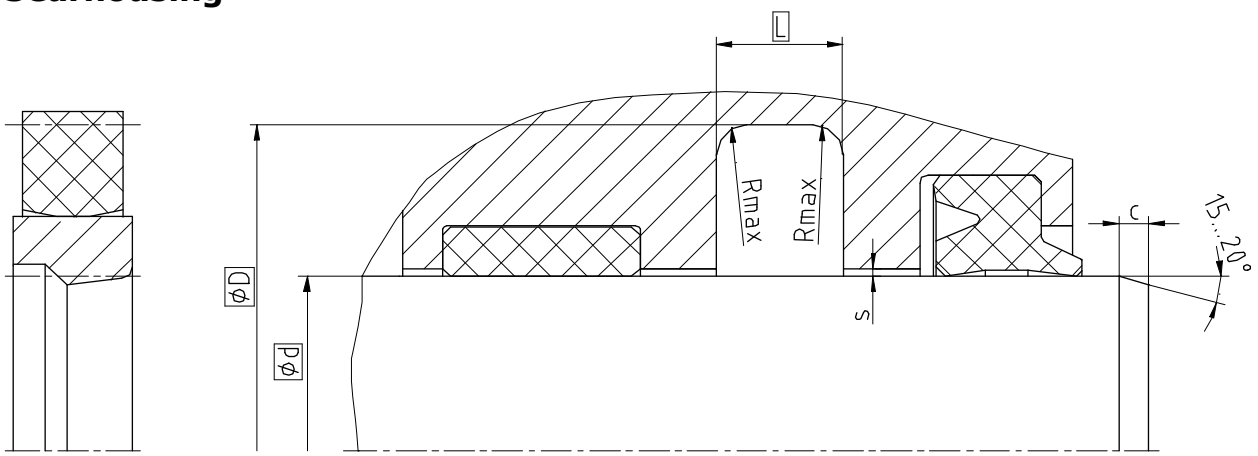

Surface roughness	Rtmax	Ra
Sliding Surface	≤ 2,5 µm	0,1...0,5 µm
Bottom of groove	≤ 6,3 µm	≤ 1,6 µm
Groove face	≤ 15 µm	≤ 3 µm

Ordering dimensions...☐

Bearing area: 50...95% and a cutting depth of 0,5xRz based on Cref = 0%

Standard dimensions

Ød f8	**ØD** H10	**L** +0,2	**Rmax**	**c**	**max. radial extrusion gap s***			
					100 bar	200 bar	400 bar	600 bar
> 4 ... ≤ 50	d + 10	5,0	0,2	4,0	0,50	0,40	0,30	0,20
> 50 ... ≤ 60	d + 15	7,5	0,3	5,0	0,50	0,40	0,30	0,20
> 60 ... ≤ 200	d + 20	10,0	0,4	6,0	0,70	0,50	0,40	0,20
> 200 ... ≤ 300	d + 25	12,5	0,4	8,5	0,80	0,60	0,50	0,30
> 300 ... ≤ 530	d + 30	15,0	0,8	10,0	0,90	0,70	0,60	0,30
> 530 ... ≤ 680	d + 35	17,5	1,2	11,5	1,00	0,80	0,70	0,30
> 680 ... ≤ 1500	d + 40	20,0	1,2	13,0	1,10	0,90	0,80	0,40

***** Extrusion gap applies to a temperature of 80 °C, higher temperatures require lower values.

Operating parameters

Glide ring	Energizer	Temperature	max. speed	max. pressure[1]
X-ECOPUR™ XH-ECOPUR™ XS-ECOPUR™ G-ECOPUR 54D™	**SKF ECORUBBER-1**	**-30 °C...+100 °C**	**5 m/s**	**600 bar (60 MPa)**
	ECOSIL	-60 °C...+110 °C		
SKF ECOWEAR 1000	SKF ECORUBBER-1	-30 °C...+80 °C		400 bar (40 MPa)
	SKF ECOSIL	-60 °C...+80 °C		

The stated operation conditions represent general indications. It is recommended not to use all maximum values simultaneously. Surface speed limits apply only to the presence of adequate lubrication film.

[1] Pressure ratings depend on the size of the extrusion gap.

Ordering example

X-Slide S09-ES, d=100mm, D=120mm, L=10mm, X-ECOPUR™ / SKF ECORUBBER-1

X-Slide S09-ES	**100 x 120 x 10**	**X-ECOPUR™ / SKF ECORUBBER-1**
Profile	d x D x L	Sealing material / Energizer

Seal data sheet

Rod seals

S09-ES F-Slide

Seal housing

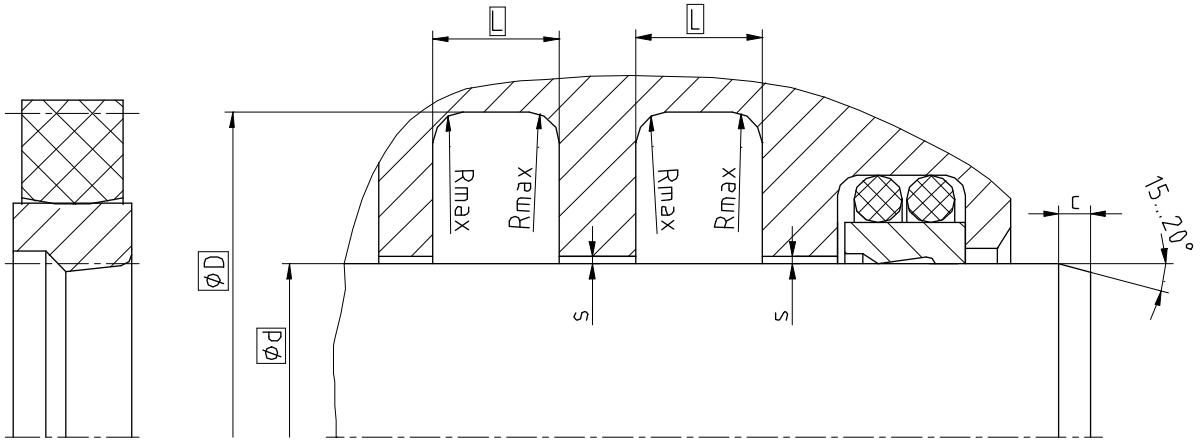

Surface roughness	Rtmax	Ra
Sliding Surface	≤ 2 µm	0,05...0,3 µm
Bottom of groove	≤ 6,3 µm	≤ 1,6 µm
Groove face	≤ 15 µm	≤ 3 µm

Ordering dimensions...□

Bearing area: 50...95% and a cutting depth of 0,5xRz based on Cref = 0%

Standard dimensions

Ød f8	**ØD** H10	**L** +0,2	**Rmax**	**c**	**max. radial extrusion gap s***			
					100 bar	200 bar	400 bar	600 bar
> 4 ... ≤ 50	d + 10	5,0	0,2	4,0	0,40	0,30	0,20	0,10
> 50 ... ≤ 60	d + 15	7,5	0,3	5,0	0,50	0,30	0,20	0,10
> 60 ... ≤ 200	d + 20	10,0	0,4	6,0	0,60	0,40	0,25	0,15
> 200 ... ≤ 300	d + 25	12,5	0,4	8,5	0,60	0,40	0,25	0,15
> 300 ... ≤ 530	d + 30	15,0	0,8	10,0	0,70	0,50	0,30	0,20
> 530 ... ≤ 680	d + 35	17,5	1,2	11,5	0,80	0,60	0,50	0,20
> 680 ... ≤ 1500	d + 40	20,0	1,2	13,0	1,00	0,70	0,60	0,30

***** Extrusion gap applies to a temperature of 80 °C, higher temperatures require lower values.

Operating parameters

Glide ring	Energizer	Temperature	max. speed	max. pressure[1]
SKF ECOFLON 2 SKF ECOFLON 3 **SKF ECOFLON 3F** SKF ECOFLON 4	**SKF ECORUBBER-1**	**-30 °C...+100 °C**	**10 m/s**	**600 bar (60 MPa)**
	SKF ECORUBBER-2	-20 °C...+200 °C		

The stated operation conditions represent general indications. It is recommended not to use all maximum values simultaneously. Surface speed limits apply only to the presence of adequate lubrication film.

[1] Pressure ratings depend on the size of the extrusion gap.

Ordering example

F-Slide S09-ES, d=100mm, D=120mm, L=10mm, SKF ECOFLON 3F / SKF ECORUBBER-1

F-Slide S09-ES	**100 x 120 x 10**	**SKF ECOFLON 3F / SKF ECORUBBER-1**
Profile	d x D x L	Sealing material / Energizer

Seal data sheet

Rod seals

S09-D X-Slide

Seal housing

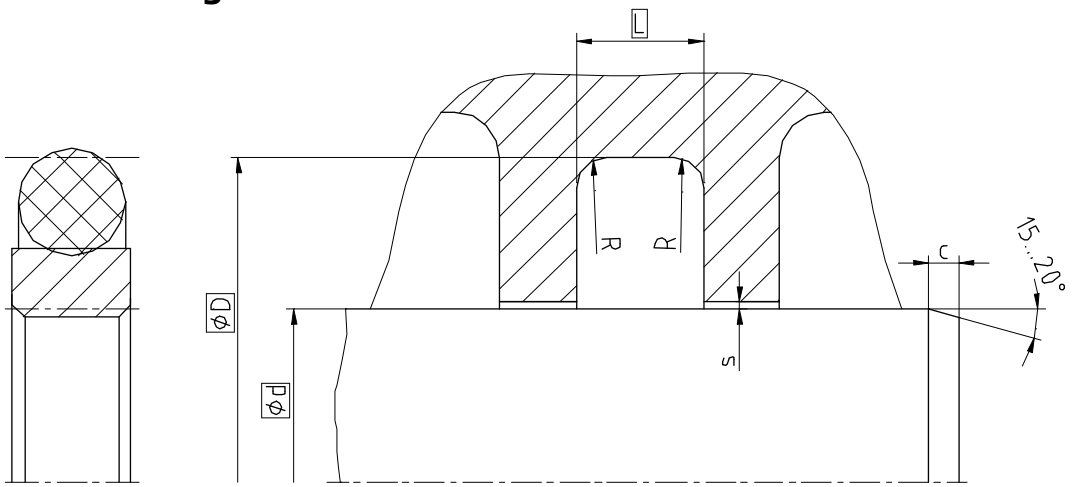

Surface roughness	Rtmax	Ra
Sliding Surface	≤ 2,5 µm	0,1...0,5 µm
Bottom of groove	≤ 6,3 µm	≤ 1,6 µm
Groove face	≤ 15 µm	≤ 3 µm

Ordering dimensions...☐

Bearing area: 50...95% and a cutting depth of 0,5xRz based on Cref = 0%

Standard dimensions

Ød f8	**ØD** H10	**L** +0,2	**R**	**c**	**ØOD**	**max. radial extrusion gap s***			
						100 bar	200 bar	400 bar	600 bar
> 4 ... ≤ 8	d + 4,9	2,2	0,4	2,5	1,78	0,30	0,30	0,20	0,10
> 8 ... ≤ 19	d + 7,3	3,2	0,6	3,5	2,62	0,40	0,30	0,20	0,10
> 19 ... ≤ 38	d + 10,7	4,2	1,0	4,5	3,53	0,50	0,40	0,30	0,20
> 38 ... ≤ 200	d + 15,1	6,3	1,3	5,0	5,33	0,50	0,40	0,30	0,20
> 200 ... ≤ 256	d + 20,5	8,1	1,8	6,0	7,00	0,70	0,50	0,40	0,20
> 256 ... ≤ 650	d + 24,0	8,1	1,8	8,0	7,00	0,70	0,50	0,40	0,20
> 650 ... ≤ 1000	d + 27,3	9,5	2,5	10,0	8,40	0,80	0,70	0,50	0,30
> 1000 ... ≤ 3000	d + 38,0	13,8	3,0	12,0	12,00	1,10	0,80	0,70	0,40

***** Extrusion gap applies to a temperature of 80 °C, higher temperatures require lower values.

Operating parameters

Glide ring	Energizer	Temperature	max. speed	max. pressure[1]
X-ECOPUR™ XH-ECOPUR™ XS-ECOPUR™ G-ECOPUR 54D™	**NBR70**	**-30 °C...+100 °C**	**5 m/s**	**600 bar (60 MPa)**
	MVQ70	-55 °C...+110 °C		
SKF ECOWEAR 1000	NBR70	-30 °C...+80 °C		400 bar (40 MPa)
	MVQ70	-55 °C...+80 °C		

The stated operation conditions represent general indications. It is recommended not to use all maximum values simultaneously. Surface speed limits apply only to the presence of adequate lubrication film.

[1] Pressure ratings depend on the size of the extrusion gap.

Ordering example

X-Slide S09-D, d=100mm, D=115,1mm, L=6,3mm, X-ECOPUR™ / NBR70

X-Slide S09-D	**100 x 115,1 x 6,3**	**X-ECOPUR™ / NBR70**
Profile	d x D x L	Sealing material / Energizer

Seal data sheet

Rod seals

S09-D F-Slide

Seal housing

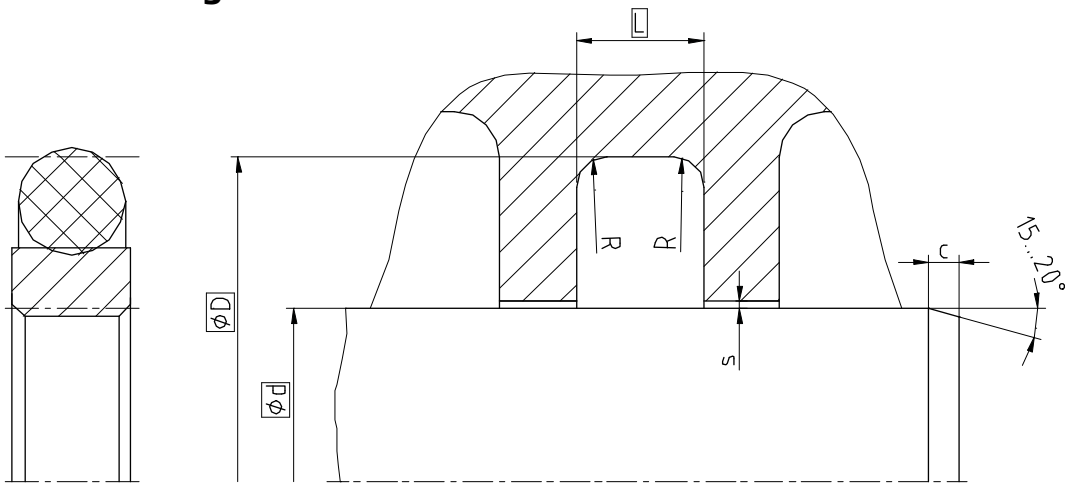

Surface roughness	Rtmax	Ra
Sliding Surface	≤ 2 µm	0,05...0,3 µm
Bottom of groove	≤ 6,3 µm	≤ 1,6 µm
Groove face	≤ 15 µm	≤ 3 µm

Ordering dimensions...☐

Bearing area: 50...95% and a cutting depth of 0,5xRz based on Cref = 0%

Standard dimensions

Ød f8	**ØD** H10	**L** +0,2	**R**	**c**	**ØOD**	**max. radial extrusion gap s***			
						100 bar	200 bar	400 bar	600 bar
> 4 ... ≤ 8	d + 4,9	2,2	0,4	2,5	1,78	0,30	0,20	0,15	0,05
> 8 ... ≤ 19	d + 7,3	3,2	0,6	3,5	2,62	0,40	0,25	0,15	0,05
> 19 ... ≤ 38	d + 10,7	4,2	1,0	4,5	3,53	0,40	0,25	0,20	0,10
> 38 ... ≤ 200	d + 15,1	6,3	1,3	5,0	5,33	0,50	0,30	0,20	0,10
> 200 ... ≤ 256	d + 20,5	8,1	1,8	6,0	7,00	0,60	0,35	0,25	0,15
> 256 ... ≤ 650	d + 24,0	8,1	1,8	8,0	7,00	0,60	0,35	0,25	0,15
> 650 ... ≤ 1000	d + 27,3	9,5	2,5	10,0	8,40	0,70	0,50	0,30	0,20
> 1000 ... ≤ 2000	d + 38,0	13,8	3,0	12,0	12,00	1,00	0,70	0,60	0,30

***** Extrusion gap applies to a temperature of 80 °C, higher temperatures require lower values.

Operating parameters

Glide ring	Energizer	Temperature	max. speed	max. pressure[1]
SKF ECOFLON 2 SKF ECOFLON 3 **SKF ECOFLON 3F** SKF ECOFLON 4	**NBR70**	**-30 °C...+100 °C**	**10 m/s**	**600 bar (60 MPa)**
	FPM70	-20 °C...+200 °C		

The stated operation conditions represent general indications. It is recommended not to use all maximum values simultaneously. Surface speed limits apply only to the presence of adequate lubrication film.

[1] Pressure ratings depend on the size of the extrusion gap.

Ordering example

F-Slide S09-D, d=100mm, D=115,1mm, L=6,3mm, SKF ECOFLON 3F / NBR70

F-Slide S09-D	**100 x 115,1 x 6,3**	**SKF ECOFLON 3F / NBR70**
Profile	d x D x L	Sealing material / Energizer

Seal data sheet

Rod seals

S09-DS X-Slide

Seal housing

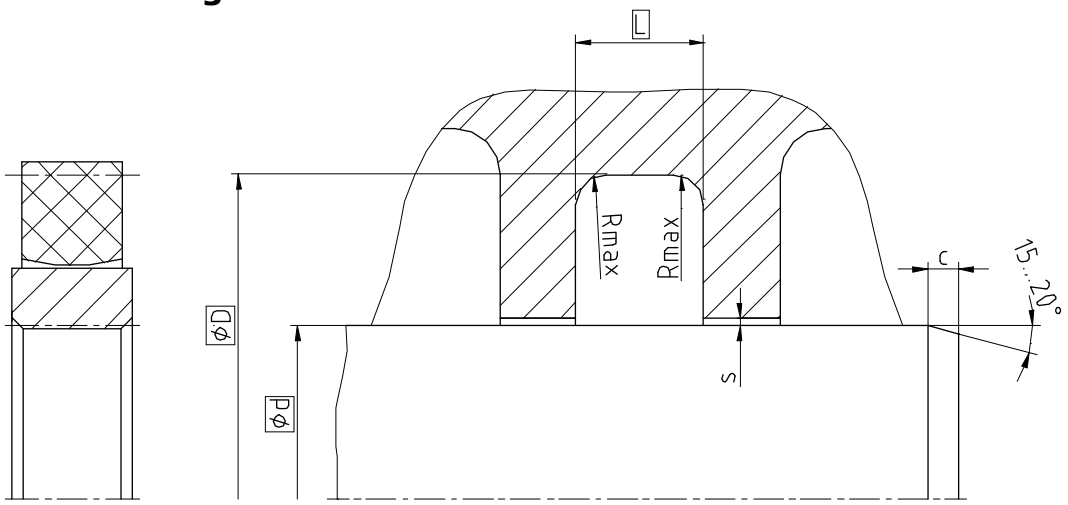

Surface roughness	Rtmax	Ra
Sliding Surface	≤ 2,5 µm	0,1...0,5 µm
Bottom of groove	≤ 6,3 µm	≤ 1,6 µm
Groove face	≤ 15 µm	≤ 3 µm

Ordering dimensions...□

Bearing area: 50...95% and a cutting depth of 0,5xRz based on Cref = 0%

Standard dimensions

Ød f8	**ØD** H10	**L** +0,2	**Rmax**	**c**	**max. radial extrusion gap s***			
					100 bar	200 bar	400 bar	600 bar
> 4 ... ≤ 50	d + 10	5,0	0,2	4,0	0,50	0,40	0,30	0,20
> 50 ... ≤ 60	d + 15	7,5	0,3	5,0	0,50	0,40	0,30	0,20
> 60 ... ≤ 200	d + 20	10,0	0,4	6,0	0,70	0,50	0,40	0,20
> 200 ... ≤ 300	d + 25	12,5	0,4	8,5	0,80	0,60	0,50	0,30
> 300 ... ≤ 530	d + 30	15,0	0,8	10,0	0,90	0,70	0,60	0,30
> 530 ... ≤ 680	d + 35	17,5	1,2	11,5	1,00	0,80	0,70	0,30
> 680 ... ≤ 1500	d + 40	20,0	1,2	13,0	1,10	0,90	0,80	0,40

***** Extrusion gap applies to a temperature of 80 °C, higher temperatures require lower values.

Operating parameters

Glide ring	Energizer	Temperature	max. speed	max. pressure[1]
X-ECOPUR™ XH-ECOPUR™ XS-ECOPUR™ G-ECOPUR 54D™	**SKF ECORUBBER-1**	**-30 °C...+100 °C**	**5 m/s**	**600 bar (60 MPa)**
	ECOSIL	-60 °C...+110 °C		
SKF ECOWEAR 1000	SKF ECORUBBER-1	-30 °C...+80 °C		400 bar (40 MPa)
	SKF ECOSIL	-60 °C...+80 °C		

The stated operation conditions represent general indications. It is recommended not to use all maximum values simultaneously. Surface speed limits apply only to the presence of adequate lubrication film.

[1] Pressure ratings depend on the size of the extrusion gap.

Ordering example

X-Slide S09-DS, d=100mm, D=120mm, L=10mm, X-ECOPUR™ / SKF ECORUBBER-1

X-Slide S09-DS	**100 x 120 x 10**	**X-ECOPUR™ / SKF ECORUBBER-1**
Profile	d x D x L	Sealing material / Energizer

Seal data sheet

Rod seals

S09-DS F-Slide

Seal housing

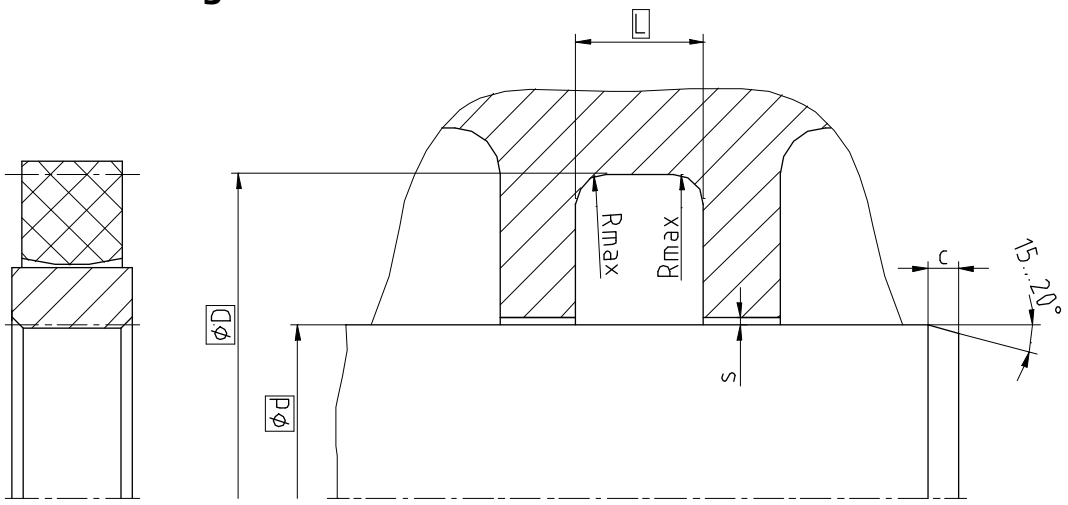

Surface roughness	Rtmax	Ra
Sliding Surface	≤ 2 µm	0,05...0,3 µm
Bottom of groove	≤ 6,3 µm	≤ 1,6 µm
Groove face	≤ 15 µm	≤ 3 µm

Ordering dimensions...□

Bearing area: 50...95% and a cutting depth of 0,5xRz based on Cref = 0%

Standard dimensions

Ød f8	**ØD** H10	**L** +0,2	**Rmax**	**c**	**max. radial extrusion gap s***			
					100 bar	200 bar	400 bar	600 bar
> 4 ... ≤ 50	d + 10	5,0	0,2	4,0	0,40	0,30	0,20	0,10
> 50 ... ≤ 60	d + 15	7,5	0,3	5,0	0,50	0,30	0,20	0,10
> 60 ... ≤ 200	d + 20	10,0	0,4	6,0	0,60	0,40	0,25	0,15
> 200 ... ≤ 300	d + 25	12,5	0,4	8,5	0,60	0,40	0,25	0,15
> 300 ... ≤ 530	d + 30	15,0	0,8	10,0	0,70	0,50	0,30	0,20
> 530 ... ≤ 680	d + 35	17,5	1,2	11,5	0,80	0,60	0,50	0,20
> 680 ... ≤ 1500	d + 40	20,0	1,2	13,0	1,00	0,70	0,60	0,30

***** Extrusion gap applies to a temperature of 80 °C, higher temperatures require lower values.

Operating parameters

Glide ring	Energizer	Temperature	max. speed	max. pressure[1]
SKF ECOFLON 2 SKF ECOFLON 3 **SKF ECOFLON 3F** SKF ECOFLON 4	**SKF ECORUBBER-1**	**-30 °C...+100 °C**	**10 m/s**	**600 bar (60 MPa)**
	SKF ECORUBBER-2	-20 °C...+200 °C		

The stated operation conditions represent general indications. It is recommended not to use all maximum values simultaneously. Surface speed limits apply only to the presence of adequate lubrication film.

[1] Pressure ratings depend on the size of the extrusion gap.

Ordering example

F-Slide S09-DS, d=100mm, D=120mm, L=10mm, SKF ECOFLON 3F / SKF ECORUBBER-1

F-Slide S09-DS	**100 x 120 x 10**	**SKF ECOFLON 3F / SKF ECORUBBER-1**
Profile	d x D x L	Sealing material / Energizer

Seal data sheet

Rod seals

S09-P

Seal housing

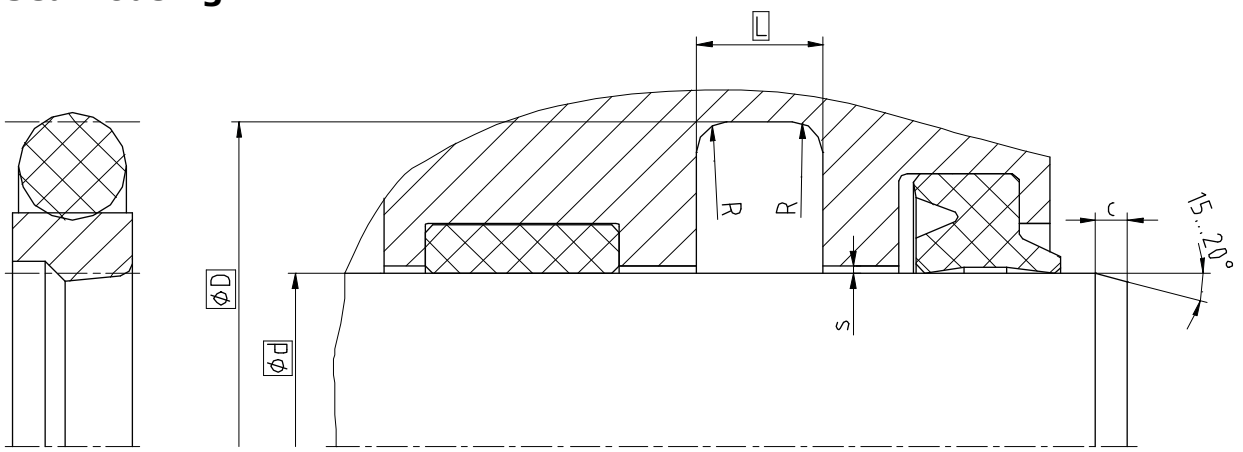

Surface roughness	Rtmax	Ra
Sliding Surface	≤ 2,5 µm	0,1...0,5 µm
Bottom of groove	≤ 6,3 µm	≤ 1,6 µm
Groove face	≤ 15 µm	≤ 3 µm

Ordering dimensions...☐

Bearing area: 50...95% and a cutting depth of 0,5xRz based on Cref = 0%

Standard dimensions

Ød f8	**ØD** H10	**L** +0,2	**R**	**c**	**ØOD**	**max. radial extrusion gap s***		
						100 bar	160 bar	250 bar
> 4 ... ≤ 8	d + 4,9	2,2	0,4	2,5	1,78	0,30	0,25	0,20
> 8 ... ≤ 19	d + 7,3	3,2	0,6	3,5	2,62	0,40	0,30	0,25
> 19 ... ≤ 38	d + 10,7	4,2	1,0	4,5	3,53	0,50	0,35	0,25
> 38 ... ≤ 200	d + 15,1	6,3	1,3	5,0	5,33	0,50	0,40	0,30
> 200 ... ≤ 256	d + 20,5	8,1	1,8	6,0	7,00	0,70	0,50	0,35
> 256 ... ≤ 600	d + 24,0	8,1	1,8	8,0	7,00	0,70	0,50	0,35

***** Extrusion gap applies to a temperature of 70 °C, higher temperatures require lower values.

Operating parameters

Glide ring	Energizer	Temperature	max. speed	max. pressure[1]
ECOPUR®	**NBR70**	**-30 °C...+100 °C**	**1 m/s**	**250 bar (25 MPa)**
H-ECOPUR™		-20 °C...+200 °C	1 m/s	
S-ECOPUR™		-20 °C...+200 °C	1,4 m/s	
T-ECOPUR™		-30 °C...+100 °C	1 m/s	
G-ECOPUR™		-30 °C...+100 °C	1 m/s	

The stated operation conditions represent general indications. It is recommended not to use all maximum values simultaneously. Surface speed limits apply only to the presence of adequate lubrication film.

[1] Pressure ratings depend on the size of the extrusion gap.

Ordering example

S09-P, d=100mm, D=115,1mm, L=6,3mm, ECOPUR® / NBR70

Rod Seal S09-P	**100 x 115,1 x 6,3**	**ECOPUR® / NBR70**
Profile	d x D x L	Sealing material / Energizer

Seal data sheet

Rod seals

S1012-M

Seal housing

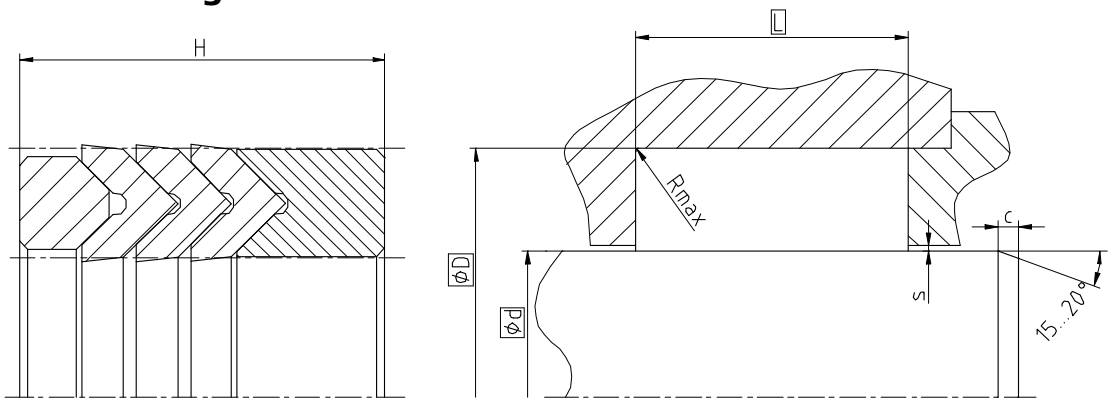

Surface roughness	Rtmax	Ra
Sliding Surface	≤ 2,5 µm	0,1...0,5 µm
Bottom of groove	≤ 6,3 µm	≤ 1,6 µm
Groove face	≤ 15 µm	≤ 3 µm

Ordering dimensions...☐

Bearing area: 50...95% and a cutting depth of 0,5xRz based on Cref = 0%

Standard dimensions

Ød f8	**ØD** H10	**L** +0,2	**Rmax**	**c**	**s***
≥ 5 ... < 40	d + 10	16	0,4	4	0,25
≥ 40 ... < 75	d + 15	25		5	0,38
≥ 75 ... < 150	d + 20	32		6	0,50
≥ 150 ... < 200	d + 25	40		8,5	0,63
≥ 200 ... < 300	d + 30	50		10	0,75
≥ 300	d + 40	63		13	1,00

***** Extrusion gap applies to a temperature of 70 °C, higher temperatures require lower values.

Operating parameters

Pressure ring S10-A	Chevron S11-M	Backup ring S12-M	Temperature	max. speed	max. pressure[1]
SKF ECOTAL SKF ECOMID[2]	ECOPUR®	SKF ECOTAL SKF ECOMID[2]	-30 °C...+100 °C	0,5 m/s	500 bar (50 MPa)
	H-ECOPUR™		-20 °C...+100 °C	0,5 m/s	
	S-ECOPUR™		-20 °C...+100 °C	0,7 m/s	
	T-ECOPUR™		-40 °C...+100 °C	0,5 m/s	
	G-ECOPUR™		-30 °C...+100 °C	0,5 m/s	
SKF ECOTAL SKF ECOMID[2]	**ECOPUR®**	**X-ECOPUR™**	**-30 °C...+100 °C**	**0,5 m/s**	**500 bar (50 MPa)**
	H-ECOPUR™	XH-ECOPUR™	-20 °C...+100 °C	0,5 m/s	
	S-ECOPUR™	XS-ECOPUR™	-20 °C...+100 °C	0,7 m/s	
	G-ECOPUR™	G-ECOPUR 54D™	-30 °C...+100 °C	0,5 m/s	
SKF ECOFLON 2	SKF ECORUBBER-1	SKF ECOFLON 2	-30 °C...+100 °C	0,5 m/s	250 bar (25 MPa)
	SKF ECORUBBER-2		-20 °C...+200 °C	0,5 m/s	
	SKF ECORUBBER-3		-50 °C...+150 °C	0,5 m/s	
	SKF ECORUBBER-H		-25 °C...+150 °C	0,5 m/s	

The stated operation conditions represent general indications. It is recommended not to use all maximum values simultaneously. Surface speed limits apply only to the presence of adequate lubrication film.

[1] Pressure ratings depend on the size of the extrusion gap.

[2] ≤ Ø260mm: SKF ECOTAL ; > Ø260mm: SKF ECOMID

Ordering example

S1012-M, d=100mm, D=120mm, L=32mm, SKF ECOTAL / ECOPUR® / X-ECOPUR

Rod Seal S1012-M	**100 x 120 x 32**	**SKF ECOTAL / ECOPUR® / X-ECOPUR**
Profile	d x D x L	Pressure ring / Sealing material / Backup ring

Seal data sheet

Rod seals

S1012-T

Seal housing

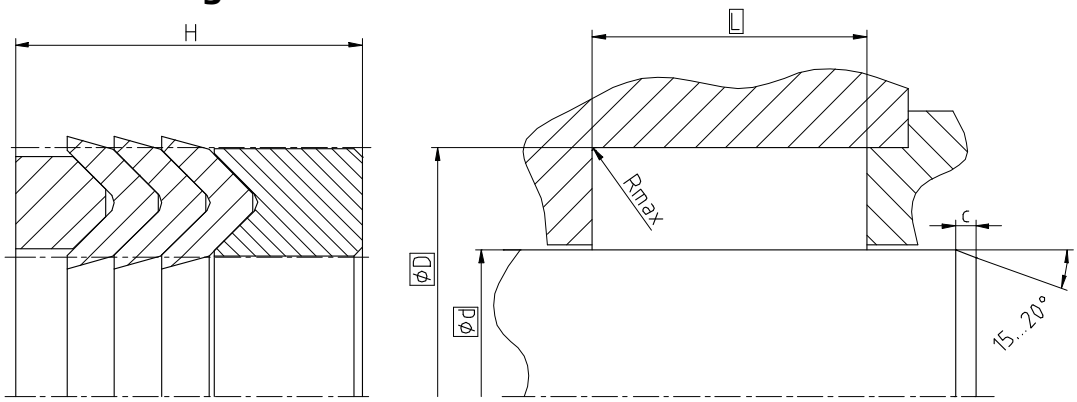

Surface roughness	Rtmax	Ra
Sliding Surface	≤ 2,5 µm	0,1...0,5 µm
Bottom of groove	≤ 6,3 µm	≤ 1,6 µm
Groove face	≤ 15 µm	≤ 3 µm

Ordering dimensions...☐

Bearing area: 50...95% and a cutting depth of 0,5xRz based on Cref = 0%

Standard dimensions

Ød f8	**ØD** H10	**L** +0,2	**Rmax**	**c**	**s***
≥ 10 ... < 40	d + 10	16	0,4	4	0,25
≥ 40 ... < 75	d + 15	25		5	0,38
≥ 75 ... < 150	d + 20	32		6	0,50
≥ 150 ... < 200	d + 25	40		8,5	0,63
≥ 200 ... < 300	d + 30	50		10	0,75
≥ 300	d + 40	63		13	1,00

***** Extrusion gap applies to a temperature of 70 °C, higher temperatures require lower values.

Operating parameters

Pressure ring S10-A	Chevron S11-T	Backup ring S12-T	Temperature	max. speed	max. pressure[1]
SKF ECOTAL SKF ECOMID[2]	ECOPUR®	SKF ECOTAL SKF ECOMID[2]	-30 °C...+100 °C	0,5 m/s	500 bar (50 MPa)
	H-ECOPUR™		-20 °C...+100 °C	0,5 m/s	
	S-ECOPUR™		-20 °C...+100 °C	0,7 m/s	
	T-ECOPUR™		-40 °C...+100 °C	0,5 m/s	
	G-ECOPUR™		-30 °C...+100 °C	0,5 m/s	
SKF ECOTAL SKF ECOMID[2]	**ECOPUR®**	**X-ECOPUR™**	**-30 °C...+100 °C**	**0,5 m/s**	**500 bar (50 MPa)**
	H-ECOPUR™	XH-ECOPUR™	-20 °C...+100 °C	0,5 m/s	
	S-ECOPUR™	XS-ECOPUR™	-20 °C...+100 °C	0,7 m/s	
	G-ECOPUR™	G-ECOPUR 54D™	-30 °C...+100 °C	0,5 m/s	
SKF ECOFLON 2	SKF ECORUBBER-1	SKF ECOFLON 2	-30 °C...+100 °C	0,5 m/s	250 bar (25 MPa)
	SKF ECORUBBER-2		-20 °C...+200 °C	0,5 m/s	
	SKF ECORUBBER-3		-50 °C...+150 °C	0,5 m/s	
	SKF ECORUBBER-H		-25 °C...+150 °C	0,5 m/s	

The stated operation conditions represent general indications. It is recommended not to use all maximum values simultaneously. Surface speed limits apply only to the presence of adequate lubrication film.

[1] Pressure ratings depend on the size of the extrusion gap.

[2] ≤ Ø260mm: SKF ECOTAL ; > Ø260mm: SKF ECOMID

Ordering example

S1012-T, d=100mm, D=120mm, L=32mm, SKF ECOTAL / ECOPUR® / X-ECOPUR

Rod Seal S1012-T **100 x 120 x 32** **SKF ECOTAL / ECOPUR® / X-ECOPUR**

Profile — d x D x L — Pressure ring / Sealing material / Backup ring

Seal data sheet

Rod seals

S1315-T

Seal housing

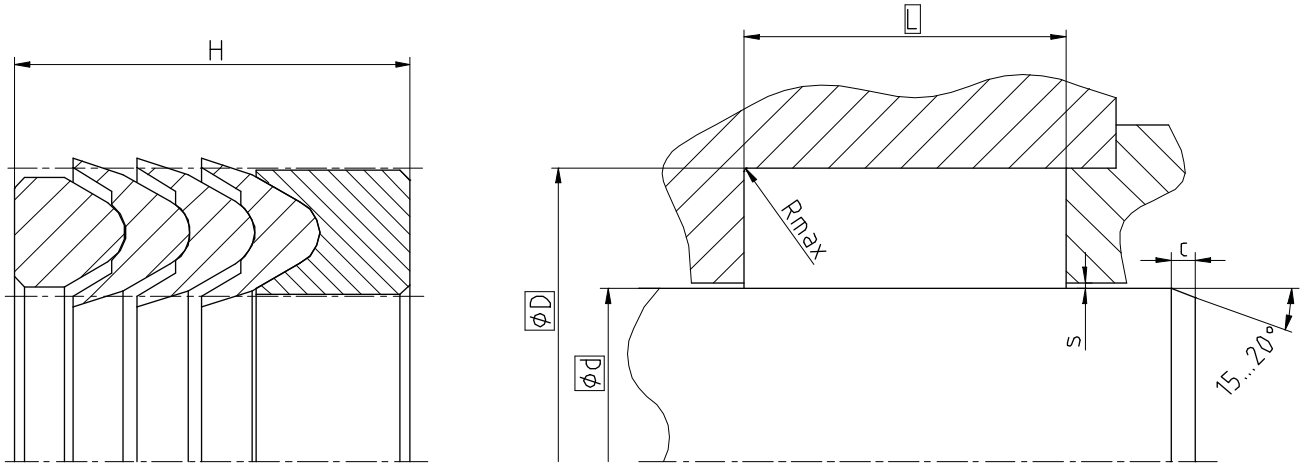

Surface roughness	Rtmax	Ra
Sliding Surface	≤ 2,5 µm	0,1...0,5 µm
Bottom of groove	≤ 6,3 µm	≤ 1,6 µm
Groove face	≤ 15 µm	≤ 3 µm

Ordering dimensions...☐

Bearing area: 50...95% and a cutting depth of 0,5xRz based on Cref = 0%

Standard dimensions

Ød f8	**ØD** H10	**L** +0,2	**Rmax**	**c**	**s***
≥ 10 ... < 40	d + 10	16	0,4	4	0,25
≥ 40 ... < 75	d + 15	25		5	0,38
≥ 75 ... < 150	d + 20	32		6	0,50
≥ 150 ... < 200	d + 25	40		8,5	0,63
≥ 200 ... < 300	d + 30	50		10	0,75
≥ 300	d + 40	63		13	1,00

***** Extrusion gap applies to a temperature of 70 °C, higher temperatures require lower values.

Operating parameters

Pressure ring S13-A	Chevron S14-T	Backup ring S15-T	Temperature	max. speed	max. pressure[1]
SKF ECOTAL SKF ECOMID[2]	ECOPUR®	SKF ECOTAL SKF ECOMID[2]	-30 °C...+100 °C	0,5 m/s	600 bar (60 MPa)
	H-ECOPUR™		-20 °C...+100 °C	0,5 m/s	
	S-ECOPUR™		-20 °C...+100 °C	0,7 m/s	
	T-ECOPUR™		-40 °C...+100 °C	0,5 m/s	
	G-ECOPUR™		-30 °C...+100 °C	0,5 m/s	
SKF ECOTAL SKF ECOMID[2]	**ECOPUR®**	**X-ECOPUR™**	**-30 °C...+100 °C**	**0,5 m/s**	**600 bar (60 MPa)**
	H-ECOPUR™	XH-ECOPUR™	-20 °C...+100 °C	0,5 m/s	
	S-ECOPUR™	XS-ECOPUR™	-20 °C...+100 °C	0,7 m/s	
	G-ECOPUR™	G-ECOPUR 54D™	-30 °C...+100 °C	0,5 m/s	

The stated operation conditions represent general indications. It is recommended not to use all maximum values simultaneously. Surface speed limits apply only to the presence of adequate lubrication film.

[1] Pressure ratings depend on the size of the extrusion gap.

[2] ≤ Ø260mm: SKF ECOTAL ; > Ø260mm: SKF ECOMID

Ordering example

S1315-T, d=100mm, D=120mm, L=32mm, SKF ECOTAL / ECOPUR® / X-ECOPUR

Rod Seal S1315-T (Profile) **100 x 120 x 32** (d x D x L) **SKF ECOTAL / ECOPUR® / X-ECOPUR** (Pressure ring / Sealing material / Backup ring)

Seal data sheet

Rod seals

S16-A

Seal housing

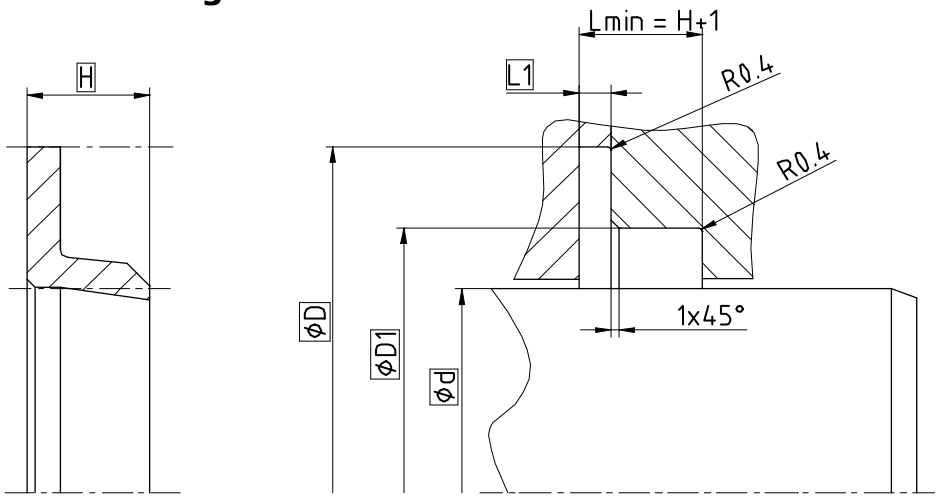

Surface roughness	Rtmax	Ra
Sliding Surface	≤ 2,5 µm	0,1...0,5 µm
Bottom of groove	≤ 6,3 µm	≤ 1,6 µm
Groove face	≤ 15 µm	≤ 3 µm

Ordering dimensions...☐

Bearing area: 50...95% and a cutting depth of 0,5xRz based on Cref = 0%

Standard dimensions

minimum nominal inside diameter Ød ≥ 6mm
This is not a standard profile and serves as a replacement for an existing installation space. New constructions should use standard profiles.

Operating parameters

Sealing material	Temperature	max. speed		max. pressure	
		linear	rotary	linear[1]	rotary
ECOPUR®	**-30 °C...+110 °C**	**0,5 m/s**	**2 m/s**	**160 bar (16 MPa)**	**7 bar (0,7 MPa)**
H-ECOPUR™	-20 °C...+110 °C				
S-ECOPUR™	-20 °C...+110 °C	0,7 m/s			
T-ECOPUR™	-50 °C...+110 °C	0,5 m/s			
G-ECOPUR™	-30 °C...+110 °C				
SKF ECORUBBER-1	-30 °C...+100 °C	0,5 m/s	5 m/s	160 bar (16 MPa)	5 bar (0,5 MPa)
SKF ECORUBBER-2	-20 °C...+200 °C				
SKF ECORUBBER-3	-50 °C...+150 °C				
SKF ECORUBBER-H	-25 °C...+150 °C				
SKF ECOFLAS	-10 °C...+200 °C				

The stated operation conditions represent general indications. It is recommended not to use all maximum values simultaneously. Surface speed limits apply only to the presence of adequate lubrication film.
[1] Pressure ratings depend on the size of the extrusion gap.

Ordering example

S16-A, d=100mm, D=150mm, D1=120mm, L1=5mm, H=25mm, ECOPUR®

Rod Seal S16-A	**100 x 150/120 x 5/25**	**ECOPUR®**
Profile	d x D/D1 x L1/H	Sealing material

Seal data sheet

Rod seals

S16-B

Seal housing

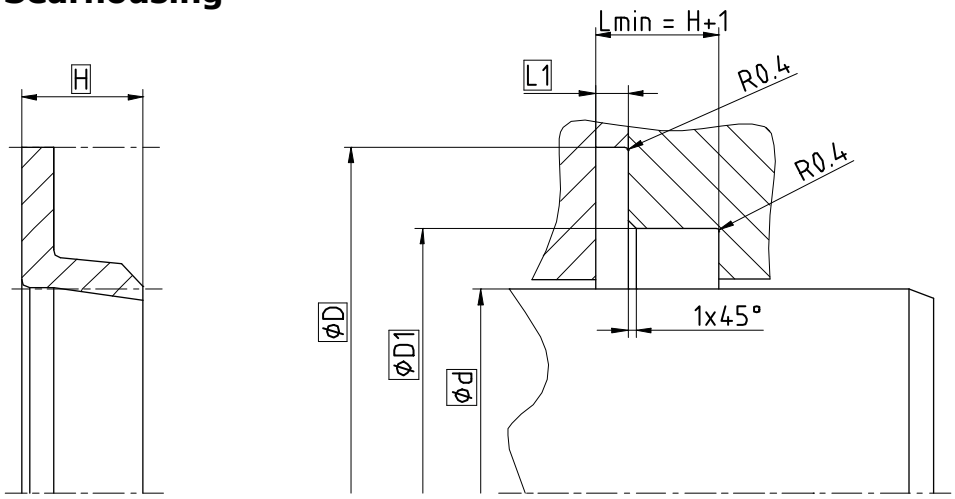

Surface roughness	Rtmax	Ra
Sliding Surface	≤ 2,5 µm	0,1...0,5 µm
Bottom of groove	≤ 6,3 µm	≤ 1,6 µm
Groove face	≤ 15 µm	≤ 3 µm

Ordering dimensions...☐

Bearing area: 50...95% and a cutting depth of 0,5xRz based on Cref = 0%

Standard dimensions

minimum nominal inside diameter Ød ≥ 11mm
This is not a standard profile and serves as a replacement for an existing installation space. New constructions should use standard profiles.

Operating parameters

Sealing material	Temperature	max. speed		max. pressure	
		linear	rotary	linear[1]	rotary
ECOPUR®	**-30 °C...+110 °C**	**0,5 m/s**	**2 m/s**	**160 bar (16 MPa)**	**7 bar (0,7 MPa)**
H-ECOPUR™	-20 °C...+110 °C				
S-ECOPUR™	-20 °C...+110 °C	0,7 m/s			
T-ECOPUR™	-50 °C...+110 °C	0,5 m/s			
G-ECOPUR™	-30 °C...+110 °C				
SKF ECORUBBER-1	-30 °C...+100 °C	0,5 m/s	5 m/s	160 bar (16 MPa)	5 bar (0,5 MPa)
SKF ECORUBBER-2	-20 °C...+200 °C				
SKF ECORUBBER-3	-50 °C...+150 °C				
SKF ECORUBBER-H	-25 °C...+150 °C				
SKF ECOFLAS	-10 °C...+200 °C				

The stated operation conditions represent general indications. It is recommended not to use all maximum values simultaneously. Surface speed limits apply only to the presence of adequate lubrication film.
[1] Pressure ratings depend on the size of the extrusion gap.

Ordering example

S16-B, d=100mm, D=150mm, D1=120mm, L1=5mm, H=25mm, ECOPUR®

Rod Seal S16-B	**100 x 150/120 x 5/25**	**ECOPUR®**
Profile	d x D/D1 x L1/H	Sealing material

Seal data sheet

Rod seals

S17-P

Seal housing

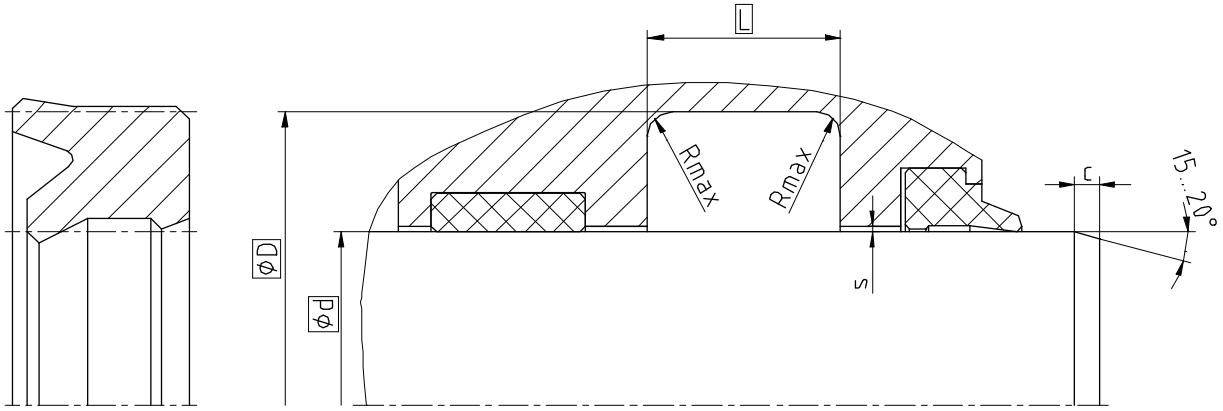

Surface roughness	Rtmax	Ra
Sliding Surface	≤ 2,5 µm	0,1...0,5 µm
Bottom of groove	≤ 6,3 µm	≤ 1,6 µm
Groove face	≤ 15 µm	≤ 3 µm

Ordering dimensions...☐

Bearing area: 50...95% and a cutting depth of 0,5xRz based on Cref = 0%

Standard dimensions

Ød f8	**ØD** H10	**L** +0,2	**Rmax**	**c**	**max. radial extrusion gap s***			
					20 bar	100 bar	200 bar	400 bar
≥ 6 ... ≤ 25	d + 8	6,3	0,4	3,5	0,33	0,17	0,11	0,05
> 25 ... ≤ 50	d + 10	8,0	0,4	4,0	0,37	0,22	0,16	0,10
> 50 ... ≤ 150	d + 15	10,0	0,4	5,0	0,46	0,31	0,25	0,19
> 150 ... ≤ 300	d + 20	14,0	0,4	6,0	0,54	0,39	0,32	0,26
> 300 ... ≤ 500	d + 25	17,0	0,4	8,5	0,61	0,46	0,39	0,33
> 500 ... ≤ 600	d + 30	25,0	0,4	10,0	0,67	0,52	0,45	0,39

* Extrusion gap applies to a temperature of 70 °C, higher temperatures require lower values.

Operating parameters

Sealing material	Temperature	max. speed	max. pressure[1]
ECOPUR®	**-30 °C...+110 °C**	**0,5 m/s**	**400 bar (40 MPa)**
H-ECOPUR™	-20 °C...+110 °C	0,5 m/s	
S-ECOPUR™	-20 °C...+110 °C	0,7 m/s	
T-ECOPUR™	-50 °C...+110 °C	0,5 m/s	

The stated operation conditions represent general indications. It is recommended not to use all maximum values simultaneously. Surface speed limits apply only to the presence of adequate lubrication film.

[1] Pressure ratings depend on the size of the extrusion gap.

Ordering example

S17-P, d=100mm, D=115mm, L=10mm, ECOPUR®

Rod Seal S17-P	**100 x 115 x 10**	**ECOPUR®**
Profile	d x D x L	Sealing material

Seal data sheet

Rod seals

S17-R

Seal housing

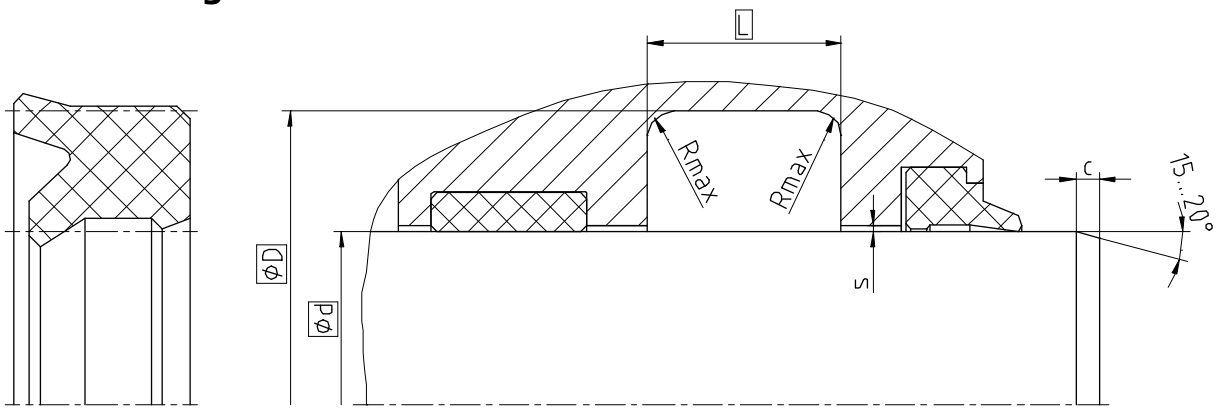

Surface roughness	Rtmax	Ra
Sliding Surface	≤ 2,5 µm	0,1...0,5 µm
Bottom of groove	≤ 6,3 µm	≤ 1,6 µm
Groove face	≤ 15 µm	≤ 3 µm

Ordering dimensions...☐

Bearing area: 50...95% and a cutting depth of 0,5xRz based on Cref = 0%

Standard dimensions

Ød f8	**ØD** H10	**L** +0,2	**Rmax**	**c**	**max. radial extrusion gap s***		
					20 bar	100 bar	160 bar
≥ 6 ... ≤ 25	d + 8	6,3	0,4	3,5	0,23	0,16	0,14
> 25 ... ≤ 50	d + 10	8,0	0,4	4,0	0,26	0,19	0,17
> 50 ... ≤ 150	d + 15	10,0	0,4	5,0	0,31	0,24	0,22
> 150 ... ≤ 300	d + 20	14,0	0,4	6,0	0,34	0,27	0,25
> 300 ... ≤ 500	d + 25	17,0	0,4	8,5	0,37	0,30	0,29
> 500 ... ≤ 600	d + 30	25,0	0,4	10,0	0,40	0,34	0,32

* Extrusion gap applies to a temperature of 70 °C, higher temperatures require lower values.

Operating parameters

Sealing material	Temperature	max. speed	max. pressure[1]
SKF ECORUBBER-1	**-30 °C...+100 °C**	**0,5 m/s**	**160 bar (16 MPa)**
SKF ECORUBBER-2	-20 °C...+200 °C		
SKF ECORUBBER-3	-50 °C...+150 °C		
SKF ECORUBBER-H	-25 °C...+150 °C		
SKF ECOFLAS	-10 °C...+200 °C		

The stated operation conditions represent general indications. It is recommended not to use all maximum values simultaneously. Surface speed limits apply only to the presence of adequate lubrication film.

[1] Pressure ratings depend on the size of the extrusion gap.

Ordering example

S17-R, d=100mm, D=115mm, L=10mm, SKF ECORUBBER-1

Rod Seal S17-R	**100 x 115 x 10**	**SKF ECORUBBER-1**
Profile	d x D x L	Sealing material

Seal data sheet

Rod seals

S18-P

Seal housing

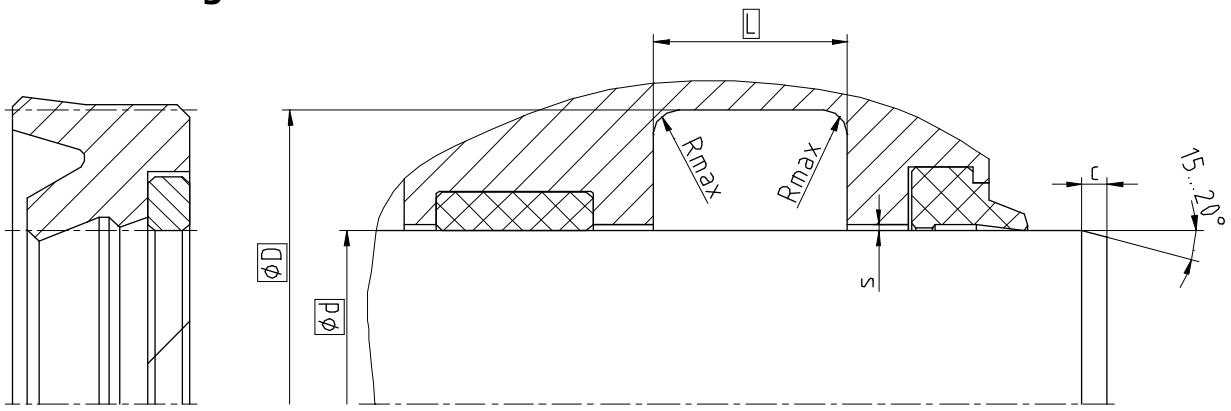

Surface roughness	Rtmax	Ra
Sliding Surface	≤ 2,5 µm	0,1...0,5 µm
Bottom of groove	≤ 6,3 µm	≤ 1,6 µm
Groove face	≤ 15 µm	≤ 3 µm

Ordering dimensions...☐

Bearing area: 50...95% and a cutting depth of 0,5xRz based on Cref = 0%

Standard dimensions

Ød f8	**ØD** H10	**L** +0,2	**Rmax**	**c**	**max. radial extrusion gap s***			
					20 bar	100 bar	400 bar	600 bar
≥ 23 ... ≤ 25	d + 8	8,0	0,4	3,5	0,80	0,80	0,30	0,11
> 25 ... ≤ 50	d + 10	9,0	0,4	4,0	1,00	1,00	0,37	0,14
> 50 ... ≤ 150	d + 15	14,0	0,4	5,0	1,50	1,47	0,46	0,17
> 150 ... ≤ 300	d + 20	17,0	0,4	6,0	2,00	1,77	0,54	0,18
> 300 ... ≤ 500	d + 25	20,0	0,4	8,5	2,50	2,06	0,62	0,20
> 500 ... ≤ 600	d + 30	25,0	0,4	10,0	3,00	2,43	0,76	0,25

* Extrusion gap applies to a temperature of 70 °C, higher temperatures require lower values.

Operating parameters

Sealing material	Backup ring	Temperature	max. speed	max. pressure[1]
ECOPUR®	**SKF ECOTAL** SKF ECOMID[2]	**-30 °C...+100 °C**	**0,5 m/s**	**600 bar (60 MPa)**
H-ECOPUR™		-20 °C...+100 °C	0,5 m/s	
S-ECOPUR™		-20 °C...+100 °C	0,7 m/s	
T-ECOPUR™		-40 °C...+100 °C	0,5 m/s	

The stated operation conditions represent general indications. It is recommended not to use all maximum values simultaneously. Surface speed limits apply only to the presence of adequate lubrication film.

[1] Pressure ratings depend on the size of the extrusion gap.

[2] ≤ Ø260mm: SKF ECOTAL ; > Ø260mm: SKF ECOMID

Ordering example

S18-P, d=100mm, D=115mm, L=10mm, ECOPUR® / SKF ECOTAL

Rod Seal S18-P	**100 x 115 x 10**	**ECOPUR® / SKF ECOTAL**
Profile	d x D x L	Sealing material / Backup ring

Seal data sheet

Rod seals

S18-R

Seal housing

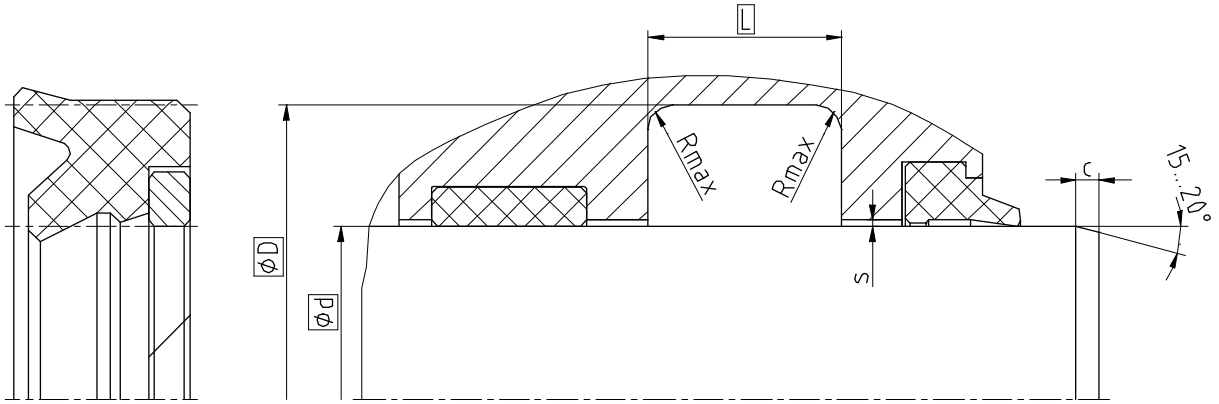

Surface roughness	Rtmax	Ra
Sliding Surface	≤ 2,5 µm	0,1...0,5 µm
Bottom of groove	≤ 6,3 µm	≤ 1,6 µm
Groove face	≤ 15 µm	≤ 3 µm

Ordering dimensions...☐

Bearing area: 50...95% and a cutting depth of 0,5xRz based on Cref = 0%

Standard dimensions

Ød f8			**ØD** H10	**L** +0,2	**Rmax**	**c**	**max. radial extrusion gap s***		
							20 bar	100 bar	250 bar
≥ 23	...	≤ 25	d + 8	8,0	0,4	3,5	0,60	0,80	0,52
> 25	...	≤ 50	d + 10	9,0	0,4	4,0	1,00	1,00	0,66
> 50	...	≤ 150	d + 15	14,0	0,4	5,0	1,50	1,40	0,78
> 150	...	≤ 300	d + 20	17,0	0,4	6,0	2,00	1,66	0,88
> 300	...	≤ 500	d + 25	20,0	0,4	8,5	2,50	1,91	1,00
> 500	...	≤ 600	d + 30	25,0	0,4	10,0	3,00	2,18	1,13

* Extrusion gap applies to a temperature of 70 °C, higher temperatures require lower values.

Operating parameters

Sealing material	Backup ring	Temperature	max. speed	max. pressure[1]
SKF ECORUBBER-1	**SKF ECOTAL**	**-30 °C...+100 °C**	**0,5 m/s**	**250 bar (25 MPa)**
	SKF ECOMID[2]	-30 °C...+100 °C		
SKF ECORUBBER-2	SKF ECOFLON 2	-20 °C...+200 °C		
SKF ECORUBBER-3	SKF ECOTAL	-50 °C...+100 °C		
	SKF ECOMID[2]	-40 °C...+100 °C		
	SKF ECOFLON 2	-50 °C...+150 °C		
SKF ECORUBBER-H	SKF ECOTAL	-25 °C...+100 °C		
	SKF ECOMID[2]	-25 °C...+100 °C		
	SKF ECOFLON 2	-25 °C...+150 °C		
SKF ECOFLAS	SKF ECOFLON 2	-10 °C...+200 °C		

The stated operation conditions represent general indications. It is recommended not to use all maximum values simultaneously. Surface speed limits apply only to the presence of adequate lubrication film.

[1] Pressure ratings depend on the size of the extrusion gap.

[2] ≤ Ø260mm: SKF ECOTAL ; > Ø260mm: SKF ECOMID

Ordering example

S18-R, d=100mm, D=115mm, L=10mm, SKF ECORUBBER-1 / SKF ECOTAL

Rod Seal S18-R	**100 x 115 x 10**	**SKF ECORUBBER-1 / SKF ECOTAL**
Profile	d x D x L	Sealing material / Backup ring

Seal data sheet

Rod seals

S19-F

Seal housing

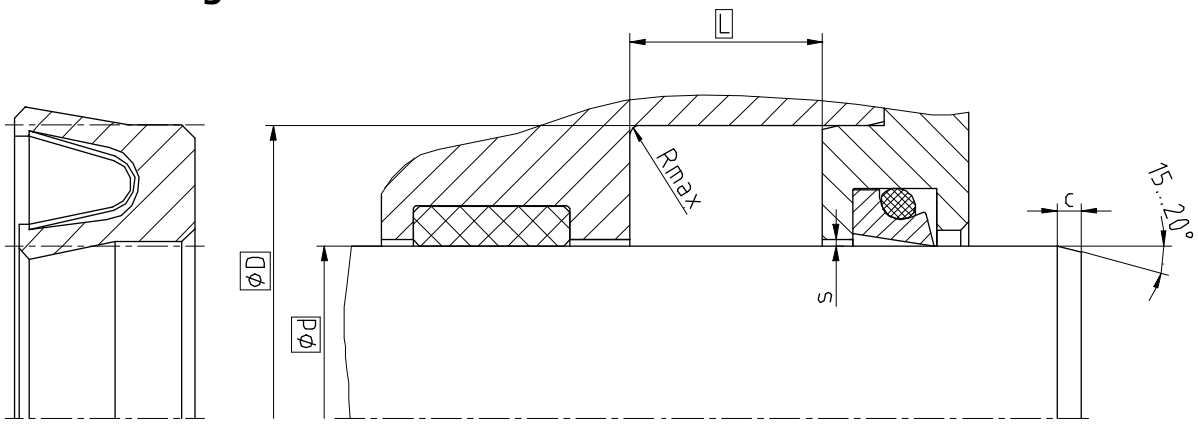

Surface roughness	Rtmax	Ra
Sliding Surface	≤ 2 µm	0,05...0,3 µm
Bottom of groove	≤ 6,3 µm	≤ 1,6 µm
Groove face	≤ 15 µm	≤ 3 µm

Ordering dimensions...□

Bearing area: 50...95% and a cutting depth of 0,5xRz based on Cref = 0%

Standard dimensions

Ød f8	**ØD** H10	**L** +0,2	**Rmax**	**c**	**max. radial extrusion gap s***				
					20 bar	100 bar	200 bar	300 bar	400 bar
≥ 5 ... ≤ 18	d + 4,5	3,6	0,4	2,0	0,25	0,12	0,10	0,08	0,07
> 18 ... ≤ 50	d + 6,2	4,8	0,4	3,0	0,35	0,17	0,12	0,10	0,08
> 50 ... ≤ 120	d + 9,4	7,1	0,4	4,0	0,45	0,22	0,17	0,12	0,10
> 120 ... ≤ 630	d + 12,2	9,5	0,4	5,0	0,60	0,31	0,25	0,15	0,12
> 630 ... ≤ 1600	d + 19,0	15,0	0,4	6,0	0,87	0,48	0,38	0,28	0,20

* Extrusion gap applies to a temperature of 80 °C, higher temperatures require lower values.

Operating parameters

Sealing material	Spring	Temperature	max. speed	max. pressure[1]
SKF ECOFLON 1	**1.4310**	**-200 °C...+260 °C**	**15 m/s**	200 bar (20 MPa)
SKF ECOFLON 2				**400 bar (40 MPa)**
SKF ECOFLON 3				
SKF ECOFLON 4				
SKF ECOWEAR 1000		-200 °C...+80 °C		200 bar (20 MPa)

The stated operation conditions represent general indications. It is recommended not to use all maximum values simultaneously. Surface speed limits apply only to the presence of adequate lubrication film.

[1] Pressure ratings depend on the size of the extrusion gap.

Ordering example

S19-F, d=100mm, D=109,4mm, L=7,1mm, SKF ECOFLON 3 / 1.4310

Rod Seal S19-F	**100 x 109,4 x 7,1**	**SKF ECOFLON 3 / 1.4310**
Profile	d x D x L	Sealing material / Spring

Seal data sheet

Rod seals

S20-R

Seal housing

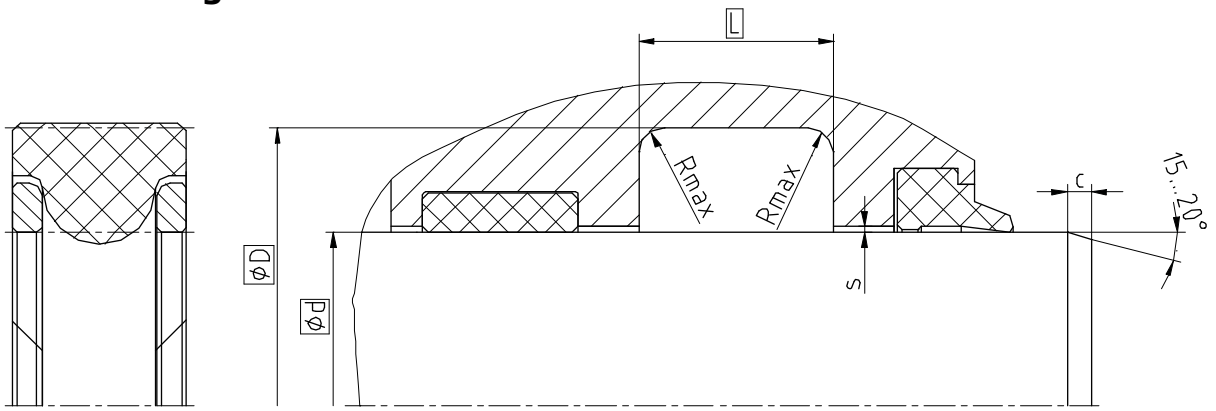

Surface roughness	Rtmax	Ra
Sliding Surface	≤ 2,5 µm	0,1...0,5 µm
Bottom of groove	≤ 6,3 µm	≤ 1,6 µm
Groove face	≤ 15 µm	≤ 3 µm

Ordering dimensions...☐

Bearing area: 50...95% and a cutting depth of 0,5xRz based on Cref = 0%

Standard dimensions

Ød f8 static	**Ød** f8 dynamic	**ØD** H10	**L** +0,25	**Rmax**	**c**	**s***
≥ 11 ... < 100	-	d + 4,36	4,5	0,4	2,0	f8/H8
≥ 100 ... < 150	≥ 11 ... < 20	d + 4,36	6,5	0,4	2,0	
≥ 150 ... < 250	≥ 20 ... < 40	d + 6,00	7,4	0,4	3,0	
≥ 250 ... < 400	≥ 40 ... < 100	d + 9,06	10,1	0,4	3,5	
≥ 400 ... < 600	≥ 100 ... < 300	d + 11,88	12,8	0,4	4,5	
≥ 600	≥ 300 ... ≤ 600	d + 17	17,5	0,4	4,5	

* Extrusion gap applies to a temperature of 70 °C, higher temperatures require lower values.

Operating parameters

Sealing material	Backup ring	Temperature	max. speed	max. pressure[1]
SKF ECORUBBER-1	**SKF ECOTAL**	**-30 °C...+100 °C**	**0,5 m/s**	**700 bar (70 Mpa)**
SKF ECORUBBER-H	SKF ECOMID[2]	-25 °C...+100 °C		
SKF ECORUBBER-2	SKF ECOPAEK	-20 °C...+200 °C		
SKF ECORUBBER-H	SKF ECOFLON 2	-25 °C...+150 °C		

The stated operation conditions represent general indications. It is recommended not to use all maximum values simultaneously. Surface speed limits apply only to the presence of adequate lubrication film.

[1] Pressure ratings depend on the size of the extrusion gap.

[2] ≤ Ø260mm: SKF ECOTAL ; > Ø260mm: SKF ECOMID

Ordering example

S20-R, d=100mm, D=115mm, L=10mm, SKF ECORUBBER-1 / SKF ECOTAL

Rod Seal S20-R (Profile) **100 x 115 x 10** (d x D x L) **SKF ECORUBBER-1 / SKF ECOTAL** (Sealing material / Backup ring)

Seal data sheet

Rod seals

S21-P

Seal housing

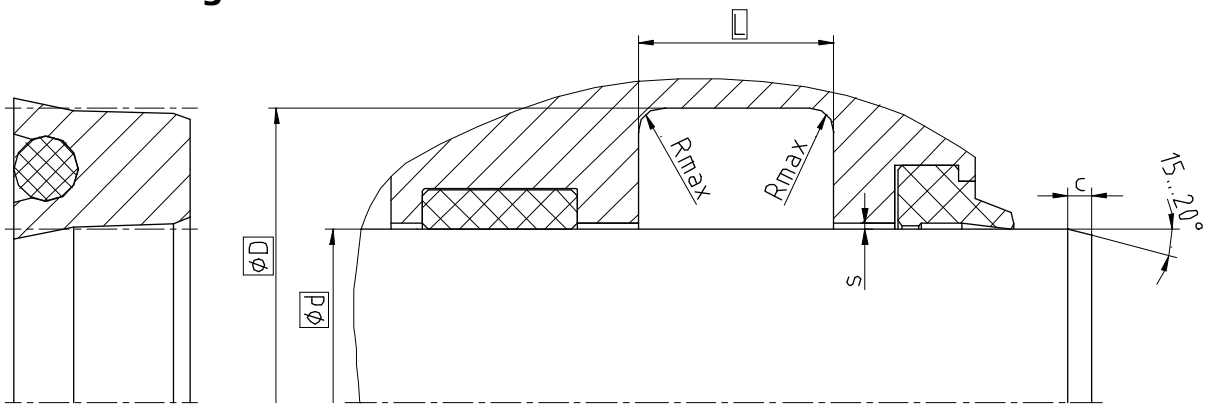

Surface roughness	Rtmax	Ra
Sliding Surface	≤ 2,5 µm	0,1...0,5 µm
Bottom of groove	≤ 6,3 µm	≤ 1,6 µm
Groove face	≤ 15 µm	≤ 3 µm

Ordering dimensions...☐

Bearing area: 50...95% and a cutting depth of 0,5xRz based on Cref = 0%

Standard dimensions

Ød f8	**ØD** H10	**L** +0,2	**Rmax**	**c**	**max. radial extrusion gap s***			
					20 bar	100 bar	200 bar	400 bar
≥ 5 ... ≤ 25	d + 8	6,3	0,4	3,5	0,33	0,17	0,11	0,05
> 25 ... ≤ 50	d + 10	8,0	0,4	4,0	0,37	0,22	0,16	0,10
> 50 ... ≤ 150	d + 15	10,0	0,4	5,0	0,46	0,31	0,25	0,19
> 150 ... ≤ 300	d + 20	14,0	0,4	6,0	0,54	0,39	0,32	0,26
> 300 ... ≤ 500	d + 25	17,0	0,4	8,5	0,61	0,46	0,39	0,33
> 500 ... ≤ 600	d + 30	25,0	0,4	10,0	0,67	0,52	0,45	0,39

* Extrusion gap applies to a temperature of 70 °C, higher temperatures require lower values.

Operating parameters

Sealing material	Energizer	Temperature	max. speed	max. pressure[1]
ECOPUR®	**NBR 70**	**-30 °C...+100 °C**	**0,5 m/s**	**400 bar (40 Mpa)**
H-ECOPUR™		-20 °C...+100 °C	0,5 m/s	
S-ECOPUR™		-25 °C...+150 °C	0,7 m/s	
T-ECOPUR™	MVQ70	-50 °C...+110 °C	0,5 m/s	

The stated operation conditions represent general indications. It is recommended not to use all maximum values simultaneously. Surface speed limits apply only to the presence of adequate lubrication film.

[1] Pressure ratings depend on the size of the extrusion gap.

Ordering example

S21-P, d=100mm, D=115mm, L=10mm, ECOPUR® / NBR70

Rod Seal S21-P	**100 x 115 x 10**	**ECOPUR® / NBR70**
Profile	d x D x L	Sealing material / Energizer

Seal data sheet

Rod seals

S22-P

Seal housing

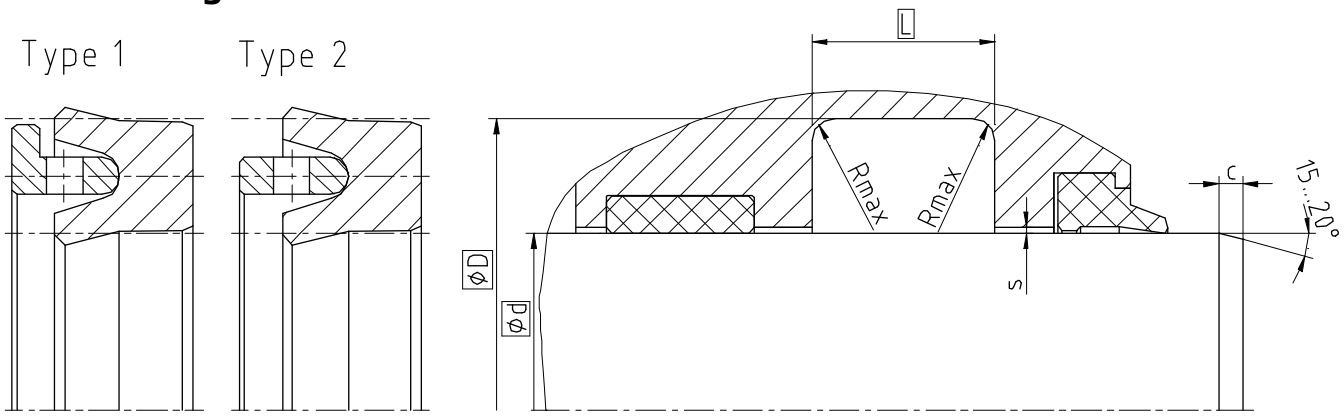

Surface roughness	Rtmax	Ra
Sliding Surface	≤ 2,5 µm	0,1...0,5 µm
Bottom of groove	≤ 6,3 µm	≤ 1,6 µm
Groove face	≤ 15 µm	≤ 3 µm

Ordering dimensions...☐

Bearing area: 50...95% and a cutting depth of 0,5xRz based on Cref = 0%

Standard dimensions

Ød f8	**ØD** H10	**L** +0,2	**Rmax**	**c**	**max. radial extrusion gap s***			
					20 bar	100 bar	200 bar	400 bar
≥ 6 ... ≤ 25	d + 8	6,3	0,4	3,5	0,33	0,17	0,11	0,05
> 25 ... ≤ 50	d + 10	8,0	0,4	4,0	0,37	0,22	0,16	0,10
> 50 ... ≤ 150	d + 15	10,0	0,4	5,0	0,46	0,31	0,25	0,19
> 150 ... ≤ 300	d + 20	14,0	0,4	6,0	0,54	0,39	0,32	0,26
> 300 ... ≤ 500	d + 25	17,0	0,4	8,5	0,61	0,46	0,39	0,33
> 500 ... ≤ 600	d + 30	25,0	0,4	10,0	0,67	0,52	0,45	0,39

* Extrusion gap applies to a temperature of 70 °C, higher temperatures require lower values. Standard: Type 2

Operating parameters

Sealing material	Support ring	Temperature	max. speed	max. pressure[1]
ECOPUR®	**SKF ECOTAL** SKF ECOMID[2]	**-30 °C...+100 °C**	**0,5 m/s**	**400 bar (40 Mpa)**
H-ECOPUR™		-20 °C...+100 °C		
T-ECOPUR™		-40 °C...+100 °C		
S-ECOPUR™		-20 °C...+100 °C	0,7 m/s	

The stated operation conditions represent general indications. It is recommended not to use all maximum values simultaneously. Surface speed limits apply only to the presence of adequate lubrication film.

[1] Pressure ratings depend on the size of the extrusion gap.

[2] ≤ Ø260mm: SKF ECOTAL ; > Ø260mm: SKF ECOMID

Ordering example

S22-P, d=100mm, D=115mm, L=10mm, ECOPUR® / SKF ECOTAL

Rod Seal S22-P	**100 x 115 x 10**	**ECOPUR® / SKF ECOTAL**
Profile	d x D x L	Sealing material / Support ring

Seal data sheet

Rod seals

S22-R

Seal housing

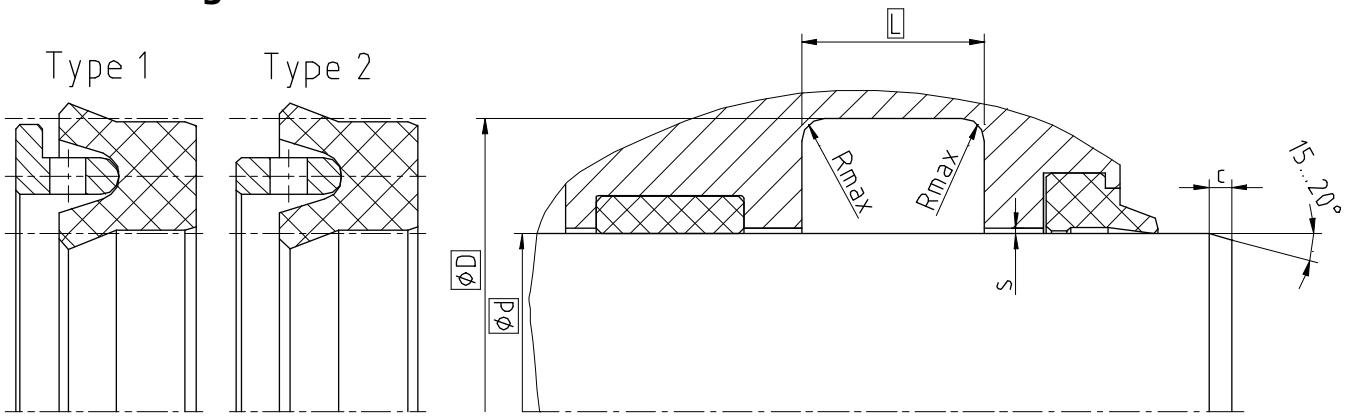

Surface roughness	Rtmax	Ra
Sliding Surface	≤ 2,5 µm	0,1...0,5 µm
Bottom of groove	≤ 6,3 µm	≤ 1,6 µm
Groove face	≤ 15 µm	≤ 3 µm

Ordering dimensions...□

Bearing area: 50...95% and a cutting depth of 0,5xRz based on Cref = 0%

Standard dimensions

Ød f8	**ØD** H10	**L** +0,2	**Rmax**	**c**	**max. radial extrusion gap s***		
					20 bar	100 bar	160 bar
≥ 6 ... ≤ 25	d + 8	6,3	0,4	3,5	0,23	0,16	0,14
> 25 ... ≤ 50	d + 10	8,0	0,4	4,0	0,26	0,19	0,17
> 50 ... ≤ 150	d + 15	10,0	0,4	5,0	0,31	0,24	0,22
> 150 ... ≤ 300	d + 20	14,0	0,4	6,0	0,34	0,27	0,25
> 300 ... ≤ 500	d + 25	17,0	0,4	8,5	0,37	0,30	0,29
> 500 ... ≤ 600	d + 30	25,0	0,4	10,0	0,40	0,34	0,32

* Extrusion gap applies to a temperature of 70 °C, higher temperatures require lower values. Standard: Type 2

Operating parameters

Sealing material	Support ring	Temperature	max. speed	max. pressure[1]
SKF ECORUBBER-1	**SKF ECOTAL** SKF ECOMID[2]	**-30 °C...+100 °C**	**0,5 m/s**	**160 bar (16 Mpa)**
SKF ECORUBBER-2	SKF ECOFLON 2	-20 °C...+100 °C		
SKF ECORUBBER-3	SKF ECOTAL SKF ECOMID[2]	-40 °C...+100 °C		
	SKF ECOFLON 2	-50 °C...+150 °C		
SKF ECORUBBER-H	SKF ECOTAL SKF ECOMID[2]	-25 °C...+100 °C		
	SKF ECOFLON 2	-25 °C...+150 °C		
SKF ECOFLAS		-10 °C...+200 °C		

The stated operation conditions represent general indications. It is recommended not to use all maximum values simultaneously. Surface speed limits apply only to the presence of adequate lubrication film.

[1] Pressure ratings depend on the size of the extrusion gap.

[2] ≤ Ø260mm: SKF ECOTAL ; > Ø260mm: SKF ECOMID

Ordering example

S22-R, d=100mm, D=115mm, L=10mm, SKF ECORUBBER-1 / SKF ECOTAL

Rod Seal S22-R	**100 x 115 x 10**	**SKF ECORUBBER-1 / SKF ECOTAL**
Profile	d x D x L	Sealing material / Support ring

Seal data sheet

Rod seals

S24-P

Seal housing

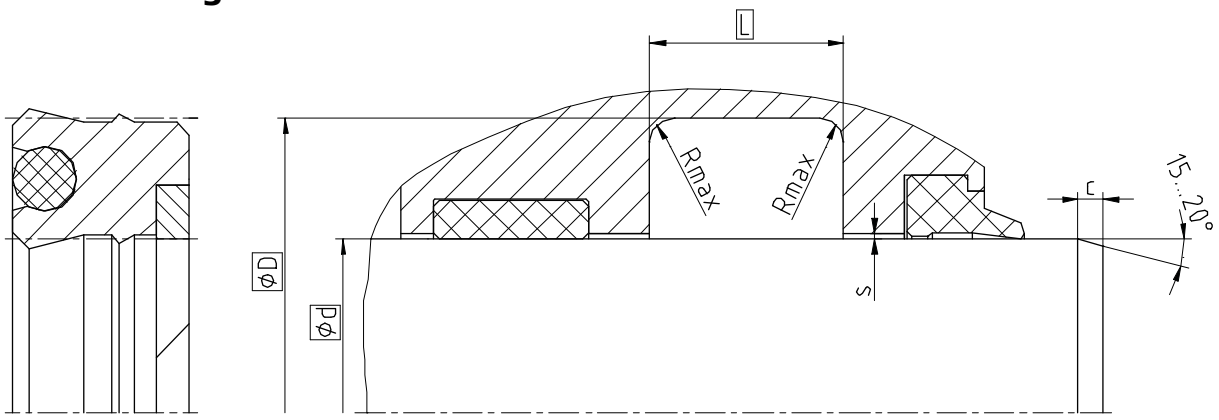

Surface roughness	Rtmax	Ra
Sliding Surface	≤ 2,5 µm	0,1...0,5 µm
Bottom of groove	≤ 6,3 µm	≤ 1,6 µm
Groove face	≤ 15 µm	≤ 3 µm

Ordering dimensions...☐

Bearing area: 50...95% and a cutting depth of 0,5xRz based on Cref = 0%

Standard dimensions

Ød f8	**ØD** H10	**L** +0,2	**Rmax**	**c**	**max. radial extrusion gap s***			
					20 bar	100 bar	400 bar	700 bar
≥ 22 ... ≤ 25	d + 8	6,3	0,4	3,5	0,80	0,80	0,30	0,04
> 25 ... ≤ 50	d + 10	8,0	0,4	4,0	1,00	1,00	0,37	0,04
> 50 ... ≤ 150	d + 15	10,0	0,4	5,0	1,50	1,47	0,46	0,05
> 150 ... ≤ 300	d + 20	14,0	0,4	6,0	2,00	1,77	0,54	0,06
> 300 ... ≤ 500	d + 25	17,0	0,4	8,5	2,50	2,06	0,62	0,06
> 500 ... ≤ 600	d + 30	25,0	0,4	10,0	3,00	2,43	0,76	0,06

* Extrusion gap applies to a temperature of 70 °C, higher temperatures require lower values.

Operating parameters

Sealing material	Energizer	Backup ring	Temperature	max. speed	max. pressure[1]
ECOPUR®	**NBR70**	**SKF ECOTAL** SKF ECOMID[2]	**-30 °C...+100 °C**	**0,5 m/s**	**700 bar (70 MPa)**
H-ECOPUR™			-20 °C...+100 °C	0,5 m/s	
S-ECOPUR™			-20 °C...+100 °C	0,7 m/s	
T-ECOPUR™			-30 °C...+100 °C	0,5 m/s	

The stated operation conditions represent general indications. It is recommended not to use all maximum values simultaneously. Surface speed limits apply only to the presence of adequate lubrication film.

[1] Pressure ratings depend on the size of the extrusion gap.

[2] ≤ Ø260mm: SKF ECOTAL ; > Ø260mm: SKF ECOMID

Ordering example

S24-P, d=100mm, D=115mm, L=10mm, H-ECOPUR® / NBR70 / SKF ECOTAL

Rod Seal S24-P	**100 x 115 x 10**	**H-ECOPUR® / NBR70 / SKF ECOTAL**
Profile	d x D x L	Sealing material / Energizer / Backup ring

Seal data sheet

Rod seals

S2527-F

Seal housing

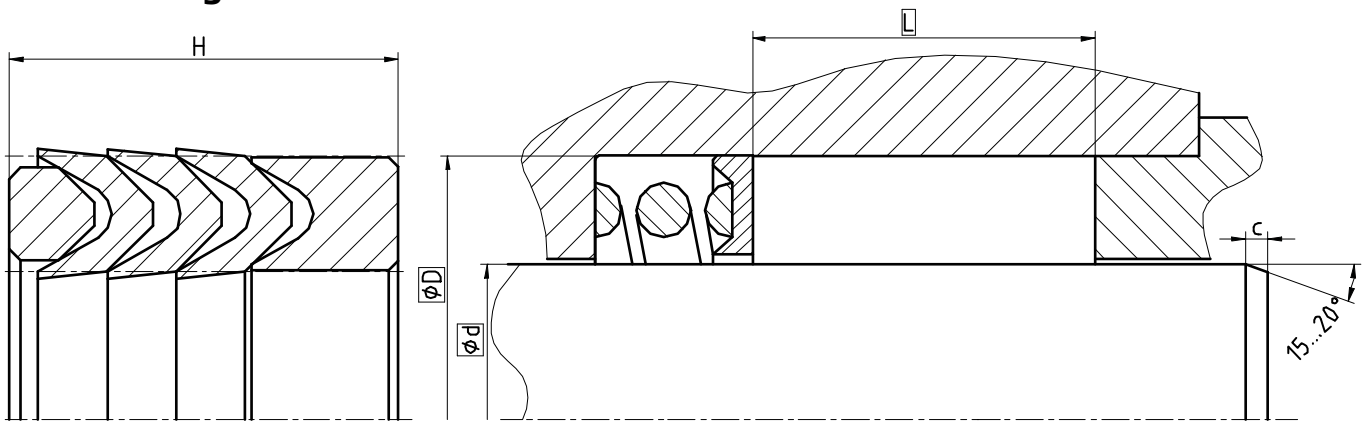

Surface roughness	Rtmax	Ra
Sliding Surface	≤ 2 µm	0,05...0,3 µm
Bottom of groove	≤ 6,3 µm	≤ 1,6 µm
Groove face	≤ 15 µm	≤ 3 µm

Ordering dimensions...☐

Bearing area: 50...95% and a cutting depth of 0,5xRz based on Cref = 0%

Standard dimensions

Ød f8	**ØD** H8	**c**	**Installation height L***		
			2 Chevrons < 16 bar	3 Chevrons ≥ 16 bar ... ≤ 50 bar	4 Chevrons ≥ 50 bar ... ≤ 100 bar
≥ 10 ... < 16	d + 8	3,5	12	15	18
≥ 16 ... < 40	d + 10	4,0	14	19	23
≥ 40 ... < 50	d + 12	4,5	16	22	26
≥ 50 ... < 75	d + 15	5	19	27	33
≥ 75 ... < 150	d + 20	6	25	35	42
≥ 150 ... < 200	d + 25	8,5	32	44	53
≥ 200 ... < 300	d + 30	10	39	54	64
≥ 300	d + 40	13	45	64	76

* The recommended chevron height depends on the pressure area and is valid for SKF ECOFLON 1. Installation height L = Chevron set height H! Standard: 3 Chevrons

Operating parameters

Pressure ring S25-F	Chevron S26-F	Backup ring S27-F	Temperature	max. speed	max. pressure
SKF ECOFLON 2	**SKF ECOFLON 1**	**SKF ECOFLON 2**	**-200 °C...+260 °C**	**1,5 m/s**	**100 bar (10 MPa)**

The stated operation conditions represent general indications. It is recommended not to use all maximum values simultaneously. Surface speed limits apply only to the presence of adequate lubrication film.

Ordering example

S2527-F, d=100mm, D=120mm, L=35mm, SKF ECOFLON 2 / SKF ECOFLON 1 / SKF ECOFLON 2

Rod Seal S2527-F	**100 x 120 x 35**	**SKF ECOFLON 2 / SKF ECOFLON 1 / SKF ECOFLON 2**
Profile	d x D x L	Pressure ring / Chevron / Backup ring

Seal data sheet

Rod seals

S2931-F

Seal housing

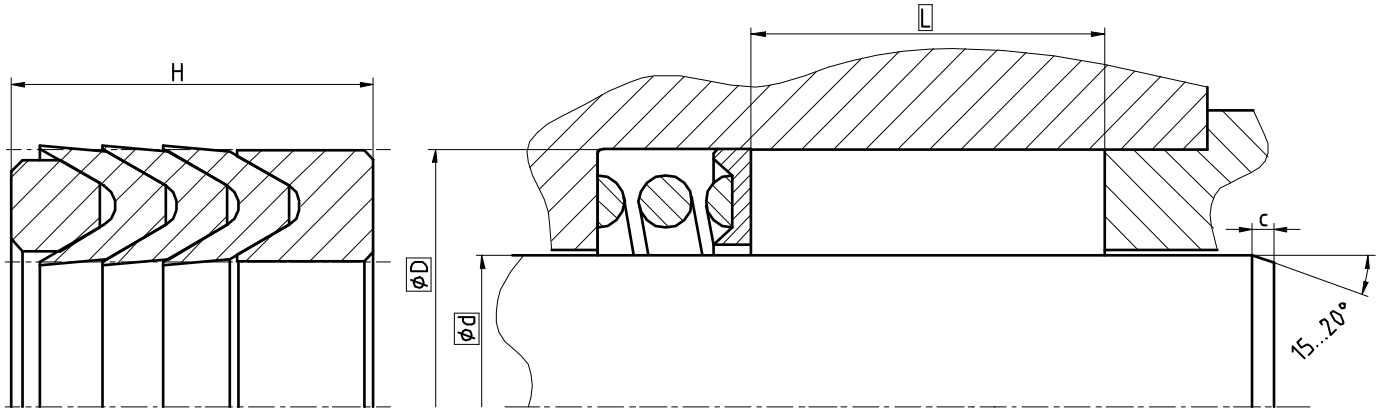

Surface roughness	Rtmax	Ra
Sliding Surface	≤ 2 µm	0,05...0,3 µm
Bottom of groove	≤ 6,3 µm	≤ 1,6 µm
Groove face	≤ 15 µm	≤ 3 µm

Ordering dimensions...☐

Bearing area: 50...95% and a cutting depth of 0,5xRz based on Cref = 0%

Standard dimensions

Ød f8	**ØD** H8	**c**	**Installation height L***		
			3 Chevrons < 50 bar	4 Chevrons ≥ 50 bar ... ≤ 100 bar	5 Chevrons ≥ 100 bar ... ≤ 315 bar
≥ 10 ... < 15	d + 8	3,5	14	17	20
≥ 15 ... < 40	d + 10	4,0	16	19	22
≥ 40 ... < 50	d + 12	4,5	19	23	27
≥ 50 ... < 75	d + 15	5	22	26,5	32
≥ 75 ... < 150	d + 20	6	32	38	44
≥ 150 ... < 200	d + 25	8,5	35	42	50
≥ 200 ... < 300	d + 30	10	39	47	56
≥ 300 ... < 600	d + 40	13	50	62	74

* The recommended chevron height depends on the pressure area and is valid for SKF ECOFLON 1. Installation height L = Chevron set height H! Standard: 3 Chevrons

Operating parameters

Pressure ring S29-F	Chevron S30-F	Backup ring S31-F	Temperature	max. speed	max. pressure
SKF ECOFLON 2	**SKF ECOFLON 1**	**SKF ECOFLON 2**	**-200 °C...+260 °C**	**1,5 m/s**	**315 bar (31,5 MPa)**

The stated operation conditions represent general indications. It is recommended not to use all maximum values simultaneously. Surface speed limits apply only to the presence of adequate lubrication film.

Ordering example

S2931-F, d=100mm, D=120mm, L=10mm, SKF ECOFLON 2 / SKF ECOFLON 1 / SKF ECOFLON 2

Rod Seal S2931-F	**100 x 120 x 10**	**SKF ECOFLON 2 / SKF ECOFLON 1 / SKF ECOFLON 2**
Profile	d x D x L	Pressure ring / Chevron / Backup ring

Seal data sheet

Rod seals

S32-P

Seal housing

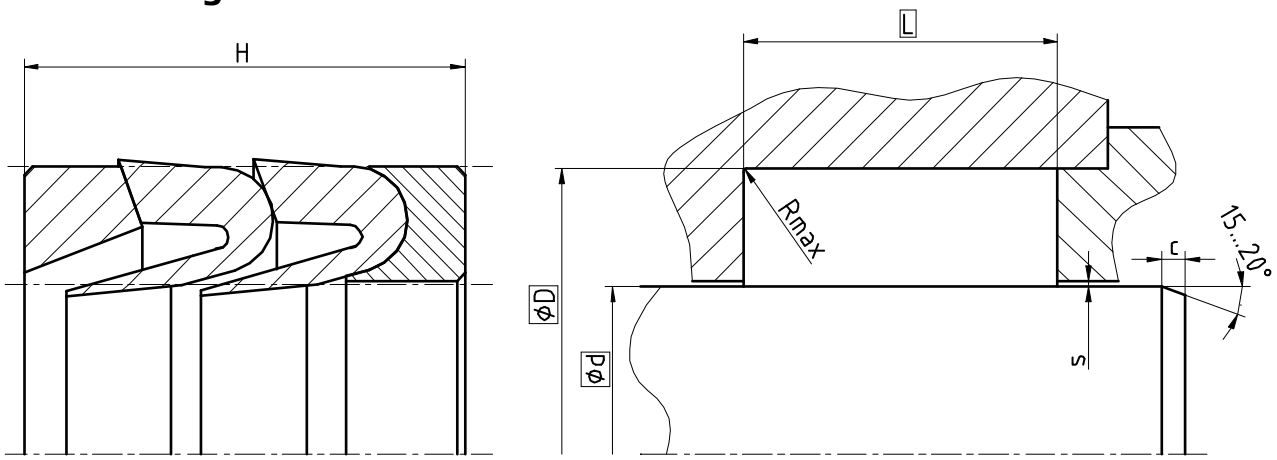

Surface roughness	Rtmax	Ra
Sliding Surface	≤ 2,5 µm	0,1...0,5 µm
Bottom of groove	≤ 6,3 µm	≤ 1,6 µm
Groove face	≤ 15 µm	≤ 3 µm

Ordering dimensions...☐

Bearing area: 50...95% and a cutting depth of 0,5xRz based on Cref = 0%

Standard dimensions

Ød f8	**ØD** H10	**L** +0,2	**Rmax**	**c**	**s***
- ... < 25	d + 12	24	0,4	4,5	0,6
≥ 25 ... < 47	d + 15	29	0,4	5	0,38
≥ 47 ... < 100	d + 20	38	0,4	6	0,50
≥ 100 ... < 150	d + 25	47,5	0,4	8,5	0,63
≥ 150 ... < 250	d + 30 / 35	57	0,4	10	0,75 / 0,88
> 250 ... < 500	d + 40 / 45	76	0,4	13	1,00 / 1,13
> 500 ... < 1000	d + 50	95	0,4	16	1,25
> 1000 ... < 2500	d + 60	113	0,4	19	1,50

* Extrusion gap applies to a temperature of 70 °C, higher temperatures require lower values.

Operating parameters

Pressure ring	Chevron	Backup ring	Temperature	max. speed	max. pressure[1]
SKF ECOTAL SKF ECOMID[2]	ECOPUR®	SKF ECOTAL SKF ECOMID[2]	-30 °C...+100 °C	0,5 m/s	500 bar (50 Mpa)
	H-ECOPUR™		-20 °C...+100 °C		
	S-ECOPUR™		-20 °C...+100 °C	0,7 m/s	
	T-ECOPUR™		-40 °C...+100 °C	0,5 m/s	
	G-ECOPUR™		-30 °C...+100 °C		
SKF ECOTAL SKF ECOMID[2]	**ECOPUR®**	**X-ECOPUR™**	**-30 °C...+100 °C**	**0,5 m/s**	**500 bar (50 Mpa)**
	H-ECOPUR™	XH-ECOPUR™	-20 °C...+100 °C		
	S-ECOPUR™	XS-ECOPUR™	-20 °C...+100 °C	0,7 m/s	
	G-ECOPUR™	G-ECOPUR 54D™	-30 °C...+100 °C	0,5 m/s	

The stated operation conditions represent general indications. It is recommended not to use all maximum values simultaneously. Surface speed limits apply only to the presence of adequate lubrication film.

[1] Pressure ratings depend on the size of the extrusion gap.

[2] ≤ Ø260mm: SKF ECOTAL ; > Ø260mm: SKF ECOMID

Ordering example

S32-P, d=100mm, D=125mm, L=10mm, SKF ECOTAL / ECOPUR® / X-ECOPUR

Rod Seal S32-P	**100 x 125 x 10**	**SKF ECOTAL / ECOPUR® / X-ECOPUR**
Profile	d x D x L	Pressure ring / Chevron / Backup ring

Seal data sheet

Rod seals

S35-P

Seal housing

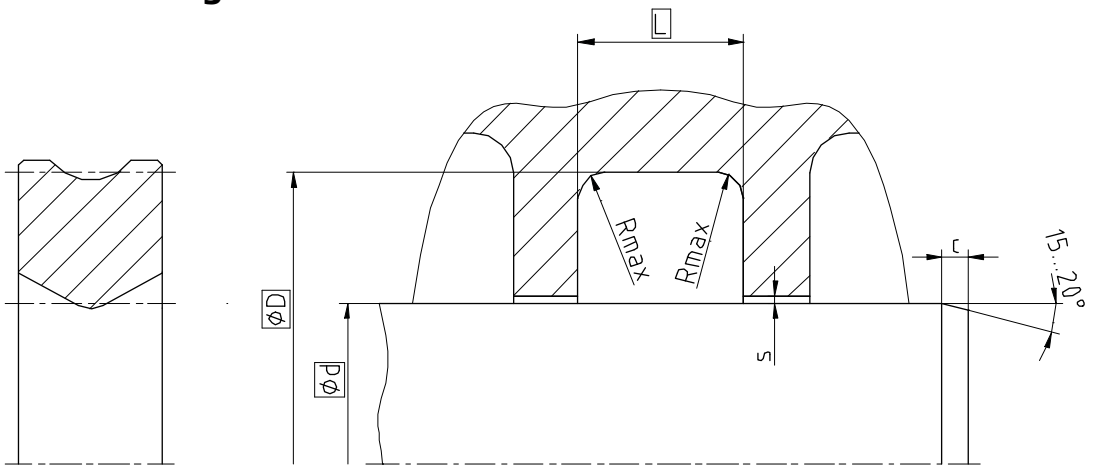

Surface roughness	Rtmax	Ra
Sliding Surface	≤ 2,5 µm	0,1...0,5 µm
Bottom of groove	≤ 6,3 µm	≤ 1,6 µm
Groove face	≤ 15 µm	≤ 3 µm

Ordering dimensions...☐

Bearing area: 50...95% and a cutting depth of 0,5xRz based on Cref = 0%

Standard dimensions

Ød f8	**ØD** H10	**L** +0,2	**Rmax**	**c**	**max. radial extrusion gap s***			
					20 bar	100 bar	200 bar	400 bar
≥ 5 ... ≤ 10	d + 5	4,0	0,4	2,0	0,33	0,18	0,10	0,05
> 10 ... ≤ 25	d + 6	4,5	0,4	3,0	0,33	0,18	0,10	0,05
> 25 ... ≤ 50	d + 8	5,5	0,4	3,5	0,33	0,18	0,10	0,05
> 50 ... ≤ 100	d + 10	6,5	0,4	4,0	0,37	0,23	0,15	0,10
> 100 ... ≤ 150	d + 15	9,5	0,4	5,0	0,46	0,33	0,25	0,18
> 150 ... ≤ 300	d + 20	12,5	0,4	6,0	0,54	0,38	0,33	0,25
> 300 ... ≤ 500	d + 25	15,0	0,4	8,5	0,61	0,45	0,40	0,33
> 500 ... ≤ 700	d + 30	17,5	0,4	10,0	0,67	0,50	0,45	0,40
> 700 ... ≤ 1250	d + 40	22,0	0,4	13,0	0,77	0,50	0,45	0,40
> 1250 ... ≤ 2000	d + 50	27,0	0,4	15,0	0,87	0,60	0,50	0,40
> 2000 ... ≤ 4000	d + 60	32,0	0,4	18,0	0,97	0,70	0,50	0,40

* Extrusion gap applies to a temperature of 70 °C, higher temperatures require lower values.

Operating parameters

Sealing material	Temperature	max. speed[2]	max. pressure[1]
ECOPUR®	**-30 °C...+110 °C**	**0,4 m/s**	**400 bar (40 MPa)**
H-ECOPUR™	-20 °C...+110 °C	0,4 m/s	
S-ECOPUR™	-20 °C...+110 °C	0,5 m/s	
T-ECOPUR™	-50 °C...+110 °C	0,4 m/s	
G-ECOPUR™	-30 °C...+110 °C	0,4 m/s	

The stated operation conditions represent general indications. It is recommended not to use all maximum values simultaneously. Surface speed limits apply only to the presence of adequate lubrication film.

[1] Pressure ratings depend on the size of the extrusion gap.

[2] Rotary applications max. 0,2 m/s

Ordering example

S35-P, d=120mm, D=135mm, L=9,5mm, ECOPUR®

Rod Seal S35-P	**120 x 135 x 9,5**	**ECOPUR®**
Profile	d x D x L	Sealing material

TOP OSA

TIIVISTÄVÄ TEKIJÄ

Piston Seals

Piston Seals

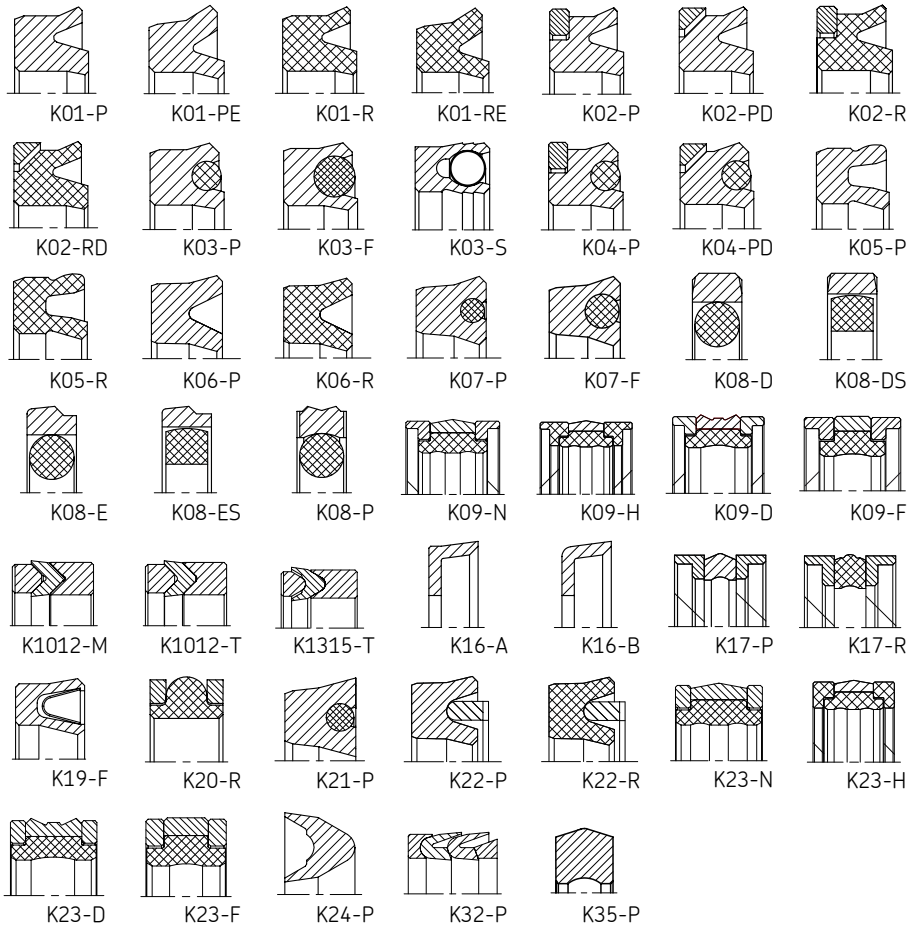

Seal data sheet

Piston seals

K01-P

Seal housing

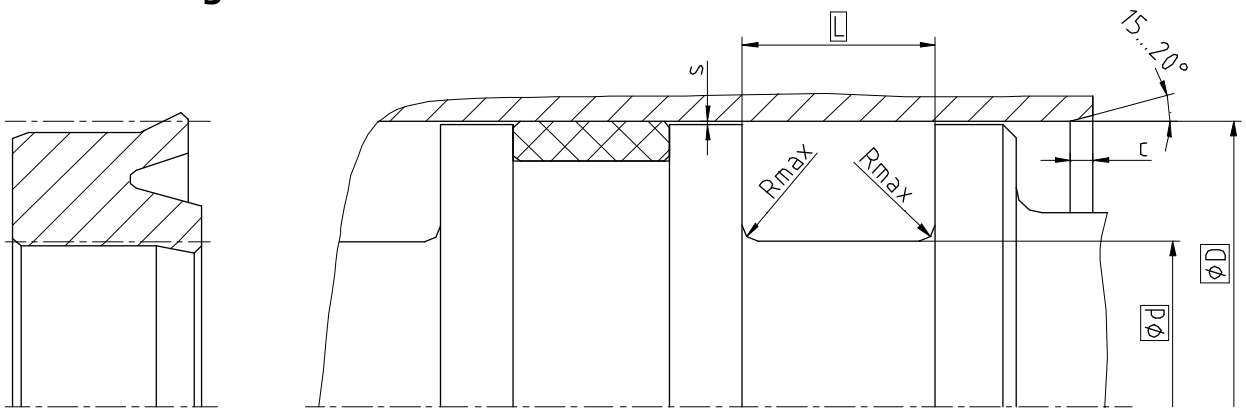

Surface roughness	Rtmax	Ra
Sliding Surface	≤ 2,5 µm	0,1...0,5 µm
Bottom of groove	≤ 6,3 µm	≤ 1,6 µm
Groove face	≤ 15 µm	≤ 3 µm

Ordering dimensions...☐

Bearing area: 50...95% and a cutting depth of 0,5xRz based on Cref = 0%

Standard dimensions

ØD H9	**Ød** h10	**L** +0,2	**Rmax**	**c**	**max. radial extrusion gap s***			
					20 bar	100 bar	200 bar	400 bar
≥ 13 ... ≤ 25	D - 8	6,0	0,4	3,5	0,33	0,18	0,11	0,05
> 25 ... ≤ 50	D - 10	7,0	0,4	4,0	0,37	0,22	0,16	0,10
> 50 ... ≤ 75	D - 12	8,0	0,4	4,5	0,42	0,27	0,20	0,14
> 75 ... ≤ 150	D - 15	10,0	0,4	5,0	0,46	0,31	0,25	0,19
> 150 ... ≤ 300	D - 20	12,0	0,4	6,0	0,54	0,39	0,32	0,26
> 300 ... ≤ 500	D - 25	18,0	0,4	8,5	0,61	0,46	0,39	0,33
> 500 ... ≤ 750	D - 30	20,0	0,4	10,0	0,67	0,52	0,45	0,39
> 750 ...	D - 40	26,0	0,4	13,0	0,67	0,52	0,45	0,39

* Extrusion gap applies to a temperature of 70 °C, higher temperatures require lower values.

Operating parameters

Sealing material	Temperature	max. speed	max. pressure[1]
ECOPUR®	**-30 °C...+110 °C**	**0,5 m/s**	**400 bar (40 MPa)**
H-ECOPUR™	-20 °C...+110 °C		
S-ECOPUR™	-20 °C...+110 °C	0,7 m/s	
T-ECOPUR™	-50 °C...+110 °C	0,5 m/s	
G-ECOPUR™	-30 °C...+110 °C		

The stated operation conditions represent general indications. It is recommended not to use all maximum values simultaneously. Surface speed limits apply only to the presence of adequate lubrication film.

[1] Pressure ratings depend on the size of the extrusion gap.

Ordering example

K01-P, D=100mm, d=85mm, L=10mm, ECOPUR®

Piston Seal K01-P	**100 x 85 x 10**	**ECOPUR®**
Profile	D x d x L	Sealing material

Seal data sheet

Piston seals

K01-PE

Seal housing

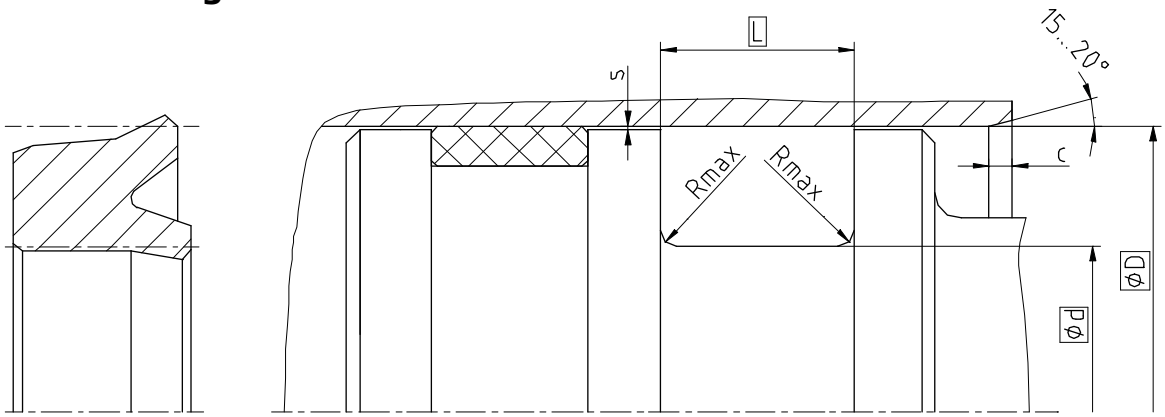

Surface roughness	Rtmax	Ra
Sliding Surface	≤ 2,5 µm	0,1...0,5 µm
Bottom of groove	≤ 6,3 µm	≤ 1,6 µm
Groove face	≤ 15 µm	≤ 3 µm

Ordering dimensions...☐

Bearing area: 50...95% and a cutting depth of 0,5xRz based on Cref = 0%

Standard dimensions

ØD H9	**Ød** h10	**L** +0,2	**Rmax**	**c**	**max. radial extrusion gap s***			
					20 bar	100 bar	200 bar	400 bar
≥ 13 ... ≤ 25	D - 8	6,0	0,4	3,5	0,33	0,18	0,11	0,05
> 25 ... ≤ 50	D - 10	7,0	0,4	4,0	0,37	0,22	0,16	0,10
> 50 ... ≤ 75	D - 12	8,0	0,4	4,5	0,42	0,27	0,20	0,14
> 75 ... ≤ 150	D - 15	10,0	0,4	5,0	0,46	0,31	0,25	0,19
> 150 ... ≤ 300	D - 20	12,0	0,4	6,0	0,54	0,39	0,32	0,26
> 300 ... ≤ 500	D - 25	18,0	0,4	8,5	0,61	0,46	0,39	0,33
> 500 ... ≤ 750	D - 30	20,0	0,4	10,0	0,67	0,52	0,45	0,39
> 750 ...	D - 40	26,0	0,4	13,0	0,67	0,52	0,45	0,39

* Extrusion gap applies to a temperature of 70 °C, higher temperatures require lower values.

Operating parameters

Sealing material	Temperature	max. speed	max. pressure[1]
ECOPUR®	**-30 °C...+110 °C**	**0,5 m/s**	**400 bar (40 MPa)**
H-ECOPUR™	-20 °C...+110 °C		
S-ECOPUR™	-20 °C...+110 °C	0,7 m/s	
T-ECOPUR™	-50 °C...+110 °C	0,5 m/s	
G-ECOPUR™	-30 °C...+110 °C		

The stated operation conditions represent general indications. It is recommended not to use all maximum values simultaneously. Surface speed limits apply only to the presence of adequate lubrication film.

[1] Pressure ratings depend on the size of the extrusion gap.

Ordering example

K01-PE, D=100mm, d=85mm, L=10mm, ECOPUR

Piston Seal K01-PE	**100 x 85 x 10**	**ECOPUR®**
Profile	D x d x L	Sealing material

Seal data sheet

Piston seals

K01-R

Seal housing

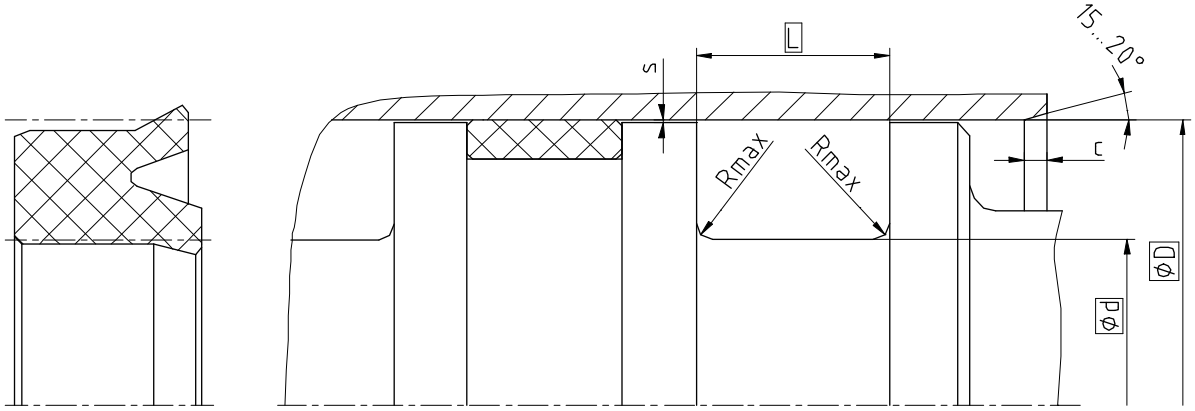

Surface roughness	Rtmax	Ra
Sliding Surface	≤ 2,5 µm	0,1...0,5 µm
Bottom of groove	≤ 6,3 µm	≤ 1,6 µm
Groove face	≤ 15 µm	≤ 3 µm

Ordering dimensions...☐

Bearing area: 50...95% and a cutting depth of 0,5xRz based on Cref = 0%

Standard dimensions

ØD H9	**Ød** h10	**L** +0,2	**Rmax**	**c**	**max. radial extrusion gap s***		
					20 bar	100 bar	160 bar
≥ 13 ... ≤ 25	D - 8	6,0	0,4	3,5	0,23	0,16	0,14
> 25 ... ≤ 50	D - 10	7,0	0,4	4,0	0,26	0,19	0,17
> 50 ... ≤ 75	D - 12	8,0	0,4	4,5	0,29	0,22	0,20
> 75 ... ≤ 150	D - 15	10,0	0,4	5,0	0,32	0,24	0,22
> 150 ... ≤ 300	D - 20	12,0	0,4	6,0	0,35	0,27	0,25
> 300 ... ≤ 500	D - 25	18,0	0,4	8,5	0,39	0,30	0,29
> 500 ... ≤ 750	D - 30	20,0	0,4	10,0	0,40	0,34	0,32
> 750 ...	D - 40	26,0	0,4	13,0	0,40	0,34	0,32

* Extrusion gap applies to a temperature of 70 °C, higher temperatures require lower values.

Operating parameters

Sealing material	Temperature	max. speed	max. pressure[1]
SKF ECORUBBER-1	**-30 °C...+100 °C**	**0,5 m/s**	**160 bar (16 MPa)**
SKF ECORUBBER-2	-20 °C...+200 °C		
SKF ECORUBBER-3	-50 °C...+150 °C		
SKF ECORUBBER-H	-25 °C...+150 °C		
SKF ECOSIL	-60 °C...+200 °C	-	-
SKF ECOFLAS	-10 °C...+200 °C	0,5 m/s	160 bar (16 MPa)

The stated operation conditions represent general indications. It is recommended not to use all maximum values simultaneously. Surface speed limits apply only to the presence of adequate lubrication film.

[1] Pressure ratings depend on the size of the extrusion gap.

Ordering example

K01-R, D=100mm, d=85mm, L=10mm, SKF ECORUBBER-1

Piston Seal K01-R	**100 x 85 x 10**	**SKF ECORUBBER-1**
Profile	D x d x L	Sealing material

Seal data sheet

Piston seals

K01-RE

Seal housing

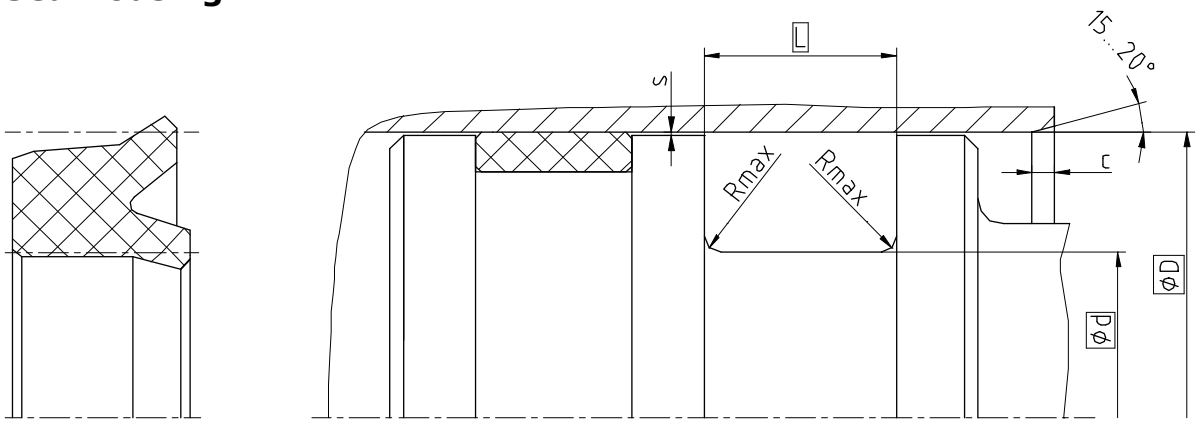

Surface roughness	Rtmax	Ra
Sliding Surface	≤ 2,5 µm	0,1...0,5 µm
Bottom of groove	≤ 6,3 µm	≤ 1,6 µm
Groove face	≤ 15 µm	≤ 3 µm

Ordering dimensions...☐

Bearing area: 50...95% and a cutting depth of 0,5xRz based on Cref = 0%

Standard dimensions

ØD H9	**Ød** h10	**L** +0,2	**Rmax**	**c**	**max. radial extrusion gap s***		
					20 bar	100 bar	160 bar
≥ 13 ... ≤ 25	D - 8	6,0	0,4	3,5	0,23	0,16	0,14
> 25 ... ≤ 50	D - 10	7,0	0,4	4,0	0,26	0,19	0,17
> 50 ... ≤ 75	D - 12	8,0	0,4	4,5	0,29	0,22	0,20
> 75 ... ≤ 150	D - 15	10,0	0,4	5,0	0,32	0,24	0,22
> 150 ... ≤ 300	D - 20	12,0	0,4	6,0	0,35	0,27	0,25
> 300 ... ≤ 500	D - 25	18,0	0,4	8,5	0,39	0,30	0,29
> 500 ... ≤ 750	D - 30	20,0	0,4	10,0	0,40	0,34	0,32
> 750	D - 40	26,0	0,4	13,0	0,40	0,34	0,32

* Extrusion gap applies to a temperature of 70 °C, higher temperatures require lower values.

Operating parameters

Sealing material	Temperature	max. speed	max. pressure[1]
SKF ECORUBBER-1	**-30 °C...+100 °C**	**0,5 m/s**	**160 bar (16 MPa)**
SKF ECORUBBER-2	-20 °C...+200 °C		
SKF ECORUBBER-3	-50 °C...+150 °C		
SKF ECORUBBER-H	-25 °C...+150 °C		
SKF ECOSIL	-60 °C...+200 °C	-	-
SKF ECOFLAS	-10 °C...+200 °C	0,5 m/s	160 bar (16 MPa)

The stated operation conditions represent general indications. It is recommended not to use all maximum values simultaneously. Surface speed limits apply only to the presence of adequate lubrication film.

[1] Pressure ratings depend on the size of the extrusion gap.

Ordering example

K01-RE, D=100mm, d=85mm, L=10mm, SKF ECORUBBER-1

Piston Seal K01-RE	**100 x 85 x 10**	**SKF ECORUBBER-1**
Profile	D x d x L	Sealing material

Seal data sheet

Piston seals

K02-P

Seal housing

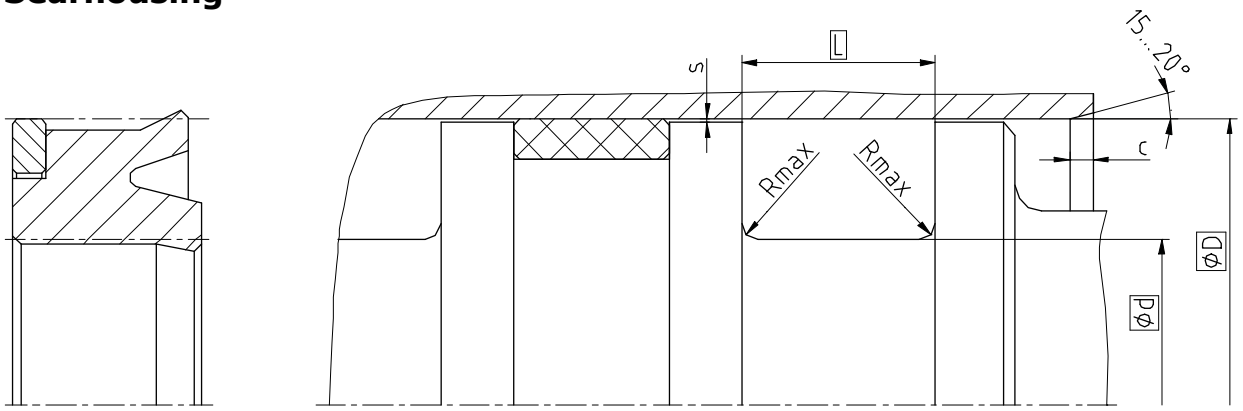

Surface roughness	Rtmax	Ra
Sliding Surface	≤ 2,5 µm	0,1...0,5 µm
Bottom of groove	≤ 6,3 µm	≤ 1,6 µm
Groove face	≤ 15 µm	≤ 3 µm

Ordering dimensions...☐

Bearing area: 50...95% and a cutting depth of 0,5xRz based on Cref = 0%

Standard dimensions

ØD H9	**Ød** h10	**L** +0,2	**Rmax**	**c**	**max. radial extrusion gap s***			
					20 bar	100 bar	400 bar	700 bar
≥ 13 ... ≤ 25	D - 8	6,0	0,4	3,5	0,80	0,80	0,30	0,04
> 25 ... ≤ 50	D - 10	7,0	0,4	4,0	1,00	1,00	0,37	0,04
> 50 ... ≤ 75	D - 12	8,0	0,4	4,5	1,25	1,24	0,42	0,05
> 75 ... ≤ 150	D - 15	10,0	0,4	5,0	1,50	1,47	0,46	0,05
> 150 ... ≤ 300	D - 20	12,0	0,4	6,0	2,00	1,77	0,54	0,06
> 300 ... ≤ 500	D - 25	18,0	0,4	8,5	2,5	2,06	0,62	0,06
> 500 ... ≤ 750	D - 30	20,0	0,4	10,0	3,00	2,43	0,76	0,06
> 750	D - 40	26,0	0,4	13,0	3,00	2,43	0,76	0,06

* Extrusion gap applies to a temperature of 70 °C, higher temperatures require lower values.

Operating parameters

Sealing material	Backup ring	Temperature	max. speed	max. pressure[1]
ECOPUR®	**SKF ECOTAL** SKF ECOMID[2]	**-30 °C...+100 °C**	**0,5 m/s**	**700 bar (70 MPa)**
H-ECOPUR™		-20 °C...+100 °C		
S-ECOPUR™		-20 °C...+100 °C	0,7 m/s	
T-ECOPUR™		-40 °C...+100 °C	0,5 m/s	
G-ECOPUR™		-30 °C...+100 °C		

The stated operation conditions represent general indications. It is recommended not to use all maximum values simultaneously. Surface speed limits apply only to the presence of adequate lubrication film.

[1] Pressure ratings depend on the size of the extrusion gap.

[2] ≤ Ø260mm: SKF ECOTAL ; > Ø260mm: SKF ECOMID

Ordering example

K02-P, D=100mm, d=85mm, L=10mm, ECOPUR® / SKF ECOTAL

Piston Seal K02-P	**100 x 85 x 10**	**ECOPUR® / SKF ECOTAL**
Profile	D x d x L	Sealing material / Backup ring

Seal data sheet

Piston seals

K02-PD

Seal housing

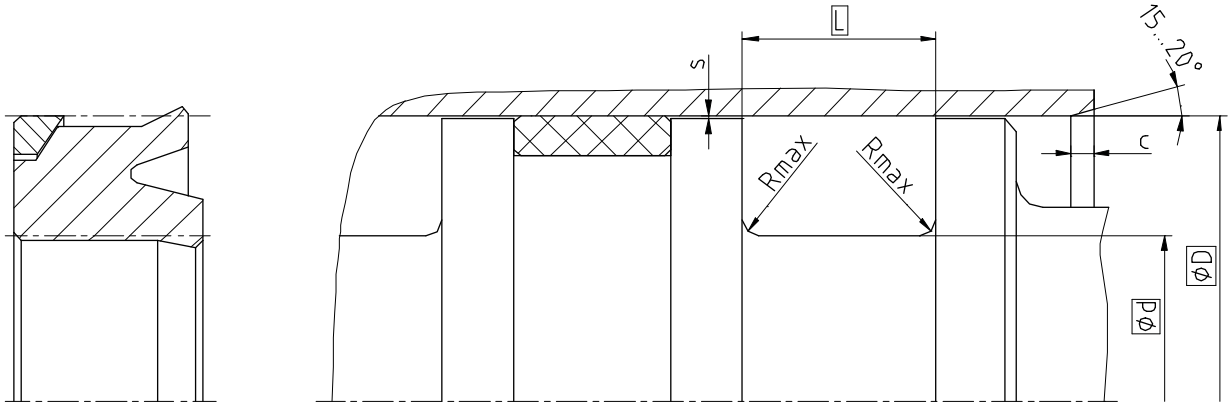

Surface roughness	Rtmax	Ra
Sliding Surface	≤ 2,5 µm	0,1...0,5 µm
Bottom of groove	≤ 6,3 µm	≤ 1,6 µm
Groove face	≤ 15 µm	≤ 3 µm

Ordering dimensions...☐

Bearing area: 50...95% and a cutting depth of 0,5xRz based on Cref = 0%

Standard dimensions

ØD H9	**Ød** h10	**L** +0,2	**Rmax**	**c**	**max. radial extrusion gap s***			
					20 bar	100 bar	400 bar	700 bar
≥ 13 ... ≤ 25	D - 8	6,0	0,4	3,5	0,80	0,80	0,30	0,04
> 25 ... ≤ 50	D - 10	7,0	0,4	4,0	1,00	1,00	0,37	0,04
> 50 ... ≤ 75	D - 12	8,0	0,4	4,5	1,25	1,24	0,42	0,05
> 75 ... ≤ 150	D - 15	10,0	0,4	5,0	1,50	1,47	0,46	0,05
> 150 ... ≤ 300	D - 20	12,0	0,4	6,0	2,00	1,77	0,54	0,06
> 300 ... ≤ 500	D - 25	18,0	0,4	8,5	2,5	2,06	0,62	0,06
> 500 ... ≤ 750	D - 30	20,0	0,4	10,0	3,00	2,43	0,76	0,06
> 750	D - 40	26,0	0,4	13,0	3,00	2,43	0,76	0,06

* Extrusion gap applies to a temperature of 70 °C, higher temperatures require lower values.

Operating parameters

Sealing material	Backup ring	Temperature	max. speed	max. pressure[1]
ECOPUR®	**SKF ECOTAL** SKF ECOMID[2]	**-30 °C...+100 °C**	**0,5 m/s**	**700 bar (70 MPa)**
H-ECOPUR™		-20 °C...+100 °C		
S-ECOPUR™		-20 °C...+100 °C	0,7 m/s	
T-ECOPUR™		-40 °C...+100 °C	0,5 m/s	
G-ECOPUR™		-30 °C...+100 °C		

The stated operation conditions represent general indications. It is recommended not to use all maximum values simultaneously. Surface speed limits apply only to the presence of adequate lubrication film.

[1] Pressure ratings depend on the size of the extrusion gap.

[2] ≤ Ø260mm: SKF ECOTAL ; > Ø260mm: SKF ECOMID

Ordering example

K02-PD, D=100mm, d=85mm, L=10mm, ECOPUR® / SKF ECOTAL

Piston Seal K02-PD	**100 x 85 x 10**	**ECOPUR® / SKF ECOTAL**
Profile	D x d x L	Sealing material / Backup ring

Seal data sheet

Piston seals

K02-R

Seal housing

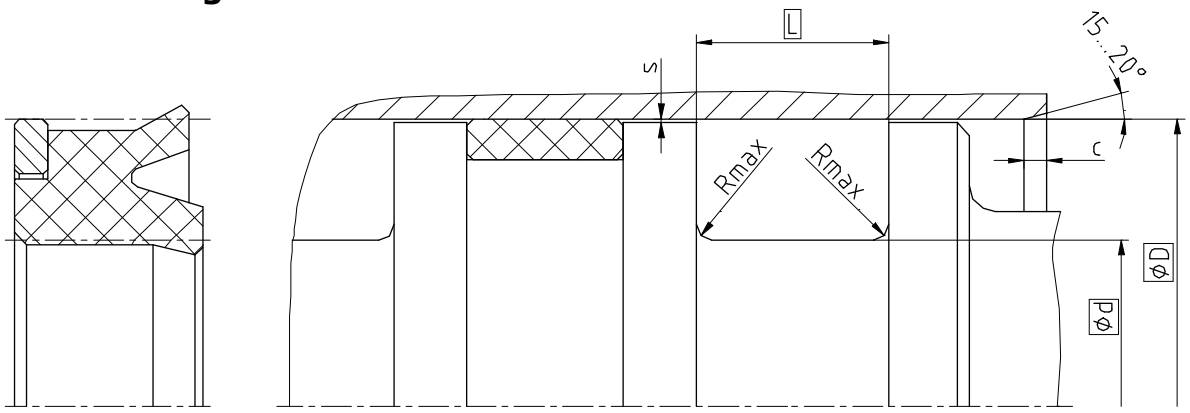

Surface roughness	Rtmax	Ra
Sliding Surface	≤ 2,5 µm	0,1...0,5 µm
Bottom of groove	≤ 6,3 µm	≤ 1,6 µm
Groove face	≤ 15 µm	≤ 3 µm

Ordering dimensions...☐

Bearing area: 50...95% and a cutting depth of 0,5xRz based on Cref = 0%

Standard dimensions

ØD H9	**Ød** h10	**L** +0,2	**Rmax**	**c**	**max. radial extrusion gap s***		
					20 bar	100 bar	250 bar
≥ 13 ... ≤ 25	D - 8	6,0	0,4	3,5	0,80	0,80	0,52
> 25 ... ≤ 50	D - 10	7,0	0,4	4,0	1,00	1,00	0,66
> 50 ... ≤ 75	D - 12	8,0	0,4	4,5	1,25	1,20	0,72
> 75 ... ≤ 150	D - 15	10,0	0,4	5,0	1,50	1,40	0,78
> 150 ... ≤ 300	D - 20	12,0	0,4	6,0	2,00	1,66	0,88
> 300 ... ≤ 500	D - 25	18,0	0,4	8,5	2,50	1,91	1,00
> 500 ... ≤ 750	D - 30	20,0	0,4	10,0	3,00	2,18	1,13
> 750	D - 40	26,0	0,4	13,0	3,00	2,18	1,13

* Extrusion gap applies to a temperature of 70 °C, higher temperatures require lower values.

Operating parameters

Sealing material	Backup ring	Temperature	max. speed	max. pressure[1]
SKF ECORUBBER-1	**SKF ECOTAL** SKF ECOMID[2]	**-30 °C...+100 °C**	**0,5 m/s**	**250 bar (25 MPa)**
SKF ECORUBBER-2	SKF ECOFLON 2	-20 °C...+200 °C		
SKF ECORUBBER-3	SKF ECOTAL SKF ECOMID[2]	-40 °C...+100 °C		
	SKF ECOFLON 2	-50 °C...+150 °C		
SKF ECORUBBER-H	SKF ECOTAL SKF ECOMID[2]	-25 °C...+100 °C		
	SKF ECOFLON 2	-25 °C...+150 °C		
SKF ECOFLAS	SKF ECOPAEK	-10 °C...+200 °C		

The stated operation conditions represent general indications. It is recommended not to use all maximum values simultaneously. Surface speed limits apply only to the presence of adequate lubrication film.

[1] Pressure ratings depend on the size of the extrusion gap.

[2] ≤ Ø260mm: SKF ECOTAL ; > Ø260mm: SKF ECOMID

Ordering example

K02-R, D=100mm, d=85mm, L=10mm, SKF ECORUBBER-1 / SKF ECOTAL

Piston Seal K02-R	**100 x 85 x 10**	**SKF ECORUBBER-1 / SKF ECOTAL**
Profile	D x d x L	Sealing material / Backup ring

Seal data sheet

Piston seals

K02-RD

Seal housing

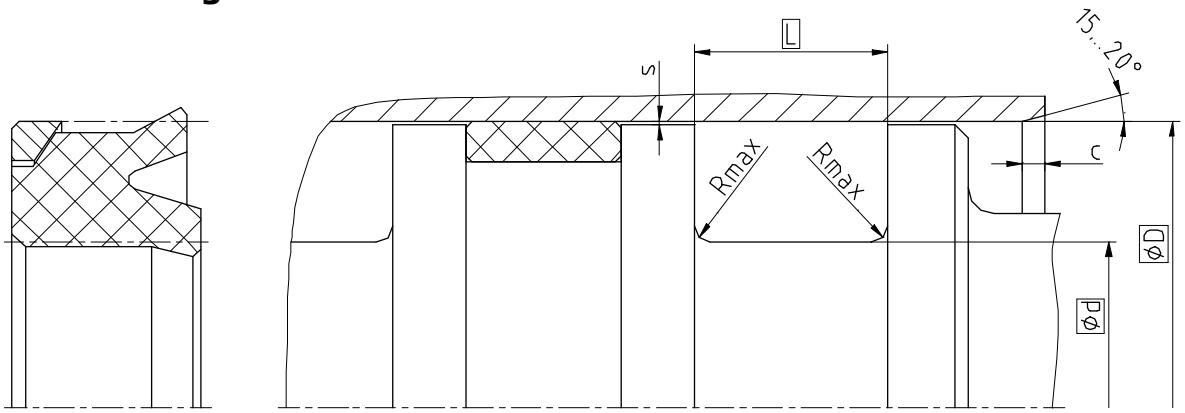

Surface roughness	Rtmax	Ra
Sliding Surface	≤ 2,5 µm	0,1...0,5 µm
Bottom of groove	≤ 6,3 µm	≤ 1,6 µm
Groove face	≤ 15 µm	≤ 3 µm

Ordering dimensions...☐

Bearing area: 50...95% and a cutting depth of 0,5xRz based on Cref = 0%

Standard dimensions

ØD H9	**Ød** h10	**L** +0,2	**Rmax**	**c**	**max. radial extrusion gap s***		
					20 bar	100 bar	250 bar
≥ 13 ... ≤ 25	D - 8	6,0	0,4	3,5	0,80	0,80	0,52
> 25 ... ≤ 50	D - 10	7,0	0,4	4,0	1,00	1,00	0,66
> 50 ... ≤ 75	D - 12	8,0	0,4	4,5	1,25	1,20	0,72
> 75 ... ≤ 150	D - 15	10,0	0,4	5,0	1,50	1,40	0,78
> 150 ... ≤ 300	D - 20	12,0	0,4	6,0	2,00	1,66	0,88
> 300 ... ≤ 500	D - 25	18,0	0,4	8,5	2,50	1,91	1,00
> 500 ... ≤ 750	D - 30	20,0	0,4	10,0	3,00	2,18	1,13
> 750	D - 40	26,0	0,4	13,0	3,00	2,18	1,13

* Extrusion gap applies to a temperature of 70 °C, higher temperatures require lower values.

Operating parameters

Sealing material	Backup ring	Temperature	max. speed	max. pressure[1]
SKF ECORUBBER-1	**SKF ECOTAL** SKF ECOMID[2]	**-30 °C...+100 °C**	**0,5 m/s**	**250 bar (25 MPa)**
SKF ECORUBBER-2	SKF ECOFLON 2	-20 °C...+200 °C		
SKF ECORUBBER-3	SKF ECOTAL SKF ECOMID[2]	-40 °C...+100 °C		
	SKF ECOFLON 2	-50 °C...+150 °C		
SKF ECORUBBER-H	SKF ECOTAL SKF ECOMID[2]	-25 °C...+100 °C		
	SKF ECOFLON 2	-25 °C...+150 °C		
SKF ECOFLAS	SKF ECOPAEK	-10 °C...+200 °C		

The stated operation conditions represent general indications. It is recommended not to use all maximum values simultaneously. Surface speed limits apply only to the presence of adequate lubrication film.

[1] Pressure ratings depend on the size of the extrusion gap.

[2] ≤ Ø260mm: SKF ECOTAL ; > Ø260mm: SKF ECOMID

Ordering examples

K02-RD, D=100mm, d=85mm, L=10mm, SKF ECORUBBER-1 / SKF ECOTAL

Piston Seal K02-RD	**100 x 85 x 10**	**SKF ECORUBBER-1 / SKF ECOTAL**
Profile	D x d x L	Sealing material / Backup ring

Seal data sheet

Piston seals

K03-P

Seal housing

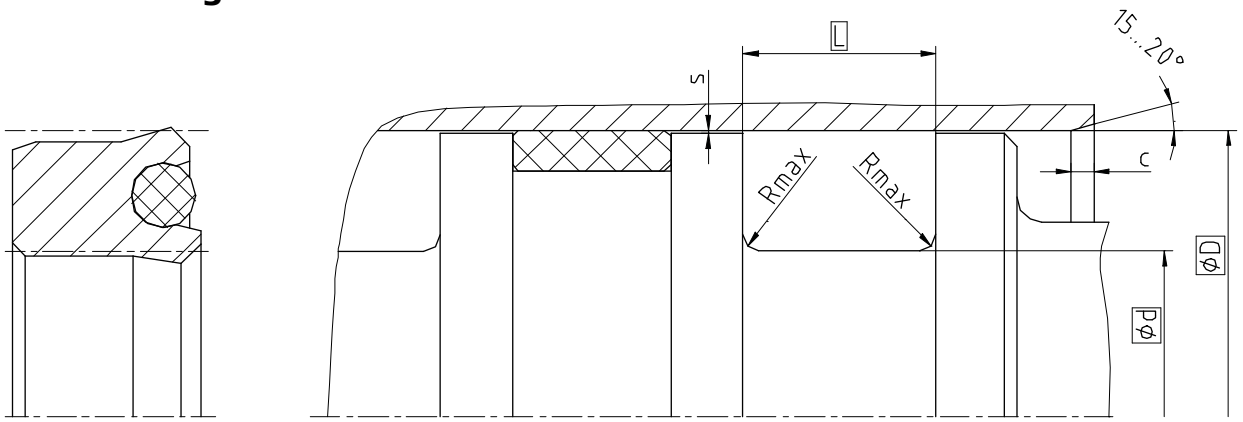

Surface roughness	Rtmax	Ra
Sliding Surface	≤ 2,5 µm	0,1...0,5 µm
Bottom of groove	≤ 6,3 µm	≤ 1,6 µm
Groove face	≤ 15 µm	≤ 3 µm

Ordering dimensions...☐

Bearing area: 50...95% and a cutting depth of 0,5xRz based on Cref = 0%

Standard dimensions

ØD H9	**Ød** h10	**L** +0,2	**Rmax**	**c**	**max. radial extrusion gap s***			
					20 bar	100 bar	200 bar	400 bar
≥ 13 ... ≤ 25	D - 8	6,0	0,4	3,5	0,33	0,18	0,11	0,05
> 25 ... ≤ 50	D - 10	7,0	0,4	4,0	0,37	0,22	0,16	0,10
> 50 ... ≤ 75	D - 12	8,0	0,4	4,5	0,42	0,27	0,20	0,14
> 75 ... ≤ 150	D - 15	10,0	0,4	5,0	0,46	0,31	0,25	0,19
> 150 ... ≤ 300	D - 20	12,0	0,4	6,0	0,54	0,39	0,32	0,26
> 300 ... ≤ 500	D - 25	18,0	0,4	8,5	0,61	0,46	0,39	0,33
> 500 ... ≤ 600	D - 30	20,0	0,4	10,0	0,67	0,52	0,45	0,39

* Extrusion gap applies to a temperature of 70 °C, higher temperatures require lower values.

Operating parameters

Sealing material	Energizer	Temperature	max. speed	max. pressure[1]
ECOPUR®	**NBR70**	**-30 °C...+100 °C**	**0,5 m/s**	**400 bar (40 MPa)**
H-ECOPUR™		-20 °C...+100 °C		
S-ECOPUR™			0,7 m/s	
T-ECOPUR™	MVQ70	-50 °C...+110 °C	0,5 m/s	

The stated operation conditions represent general indications. It is recommended not to use all maximum values simultaneously. Surface speed limits apply only to the presence of adequate lubrication film.

[1] Pressure ratings depend on the size of the extrusion gap.

Ordering example

K03-P, D=100mm, d=85mm, L=10mm, ECOPUR / NBR70

Piston Seal K03-P	**100 x 85 x 10**	**ECOPUR® / NBR70**
Profile	D x d x L	Sealing material / Backup ring

Seal data sheet

Piston seals

K03-F

Seal housing

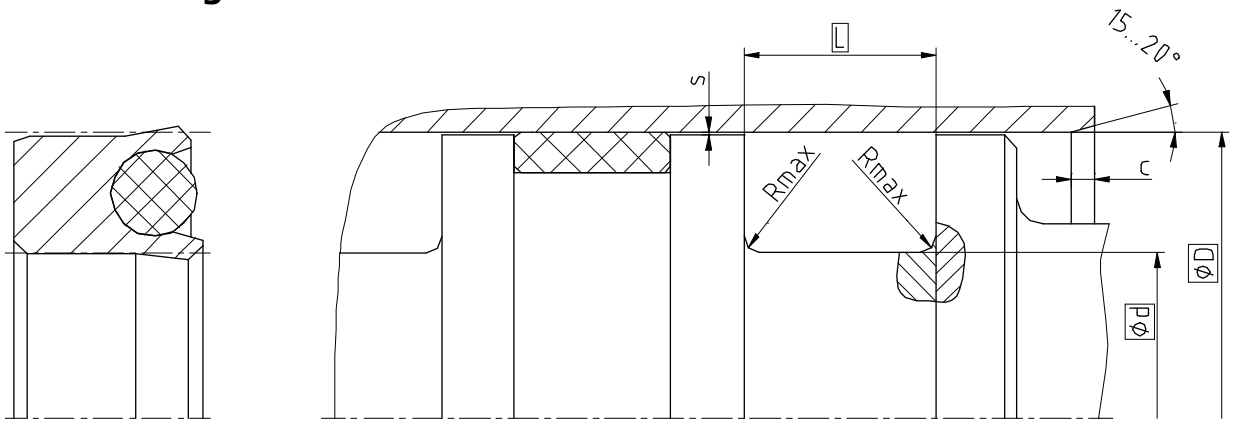

Surface roughness	Rtmax	Ra
Sliding Surface	≤ 2 µm	0,05...0,3 µm
Bottom of groove	≤ 6,3 µm	≤ 1,6 µm
Groove face	≤ 15 µm	≤ 3 µm

Ordering dimensions...☐

Bearing area: 50...95% and a cutting depth of 0,5xRz based on Cref = 0%

Standard dimensions

ØD H9	**Ød** h10	**L** +0,2	**Rmax**	**c**	**max. radial extrusion gap s***			
					20 bar	100 bar	200 bar	400 bar
≥ 13 ... ≤ 25	D - 8	6,4	0,4	3,5	0,40	0,20	0,15	0,09
> 25 ... ≤ 50	D - 10	8,5	0,4	4,0	0,45	0,22	0,17	0,10
> 50 ... ≤ 75	D - 12	10,0	0,4	4,5	0,60	0,36	0,25	0,14
> 75 ... ≤ 150	D - 15	12,3	0,4	5,0	0,75	0,40	0,33	0,18
> 150 ... ≤ 300	D - 20	16,0	0,4	6	0,87	0,48	0,38	0,20
> 300 ... ≤ 500	D - 25	19,8	0,4	8,5	0,87	0,48	0,38	0,20
> 500 ... ≤ 600	D - 30	24,5	0,4	10,0	0,87	0,48	0,38	0,20

* Extrusion gap applies to a temperature of 70 °C, higher temperatures require lower values.

Operating parameters

Sealing material	Energizer	Temperature	max. speed	max. pressure[1]
SKF ECOFLON 1 SKF ECOFLON 2 **SKF ECOFLON 3** SKF ECOFLON 4	MVQ70	-55 °C...+200 °C	**1,0 m/s**	**200 bar (20 MPa)**
	NBR70	-30 °C...+100 °C		400 bar (40 MPa)
	FPM75	**-20 °C...+200 °C**		
	EPDM70	-50 °C...+150 °C		
SKF ECOWEAR 1000	NBR70	-30 °C...+80 °C	0,5 m/s	200 bar (20 MPa)
	FPM75	-20 °C...+80 °C		
	EPDM70	-50 °C...+80 °C		
	MVQ70	-55 °C...+80 °C		

The stated operation conditions represent general indications. It is recommended not to use all maximum values simultaneously. Surface speed limits apply only to the presence of adequate lubrication film.

[1] Pressure ratings depend on the size of the extrusion gap.

Ordering example

K03-F, D=100mm, D=85mm, L=12,3mm, SKF ECOFLON 3 / FPM75

Piston Seal K03-F	**100 x 85 x 12,3**	**SKF ECOFLON 3 / FPM75**
Profile	D x d x L	Sealing material / Backup ring

Seal data sheet
Piston seals

K03-S

Seal housing

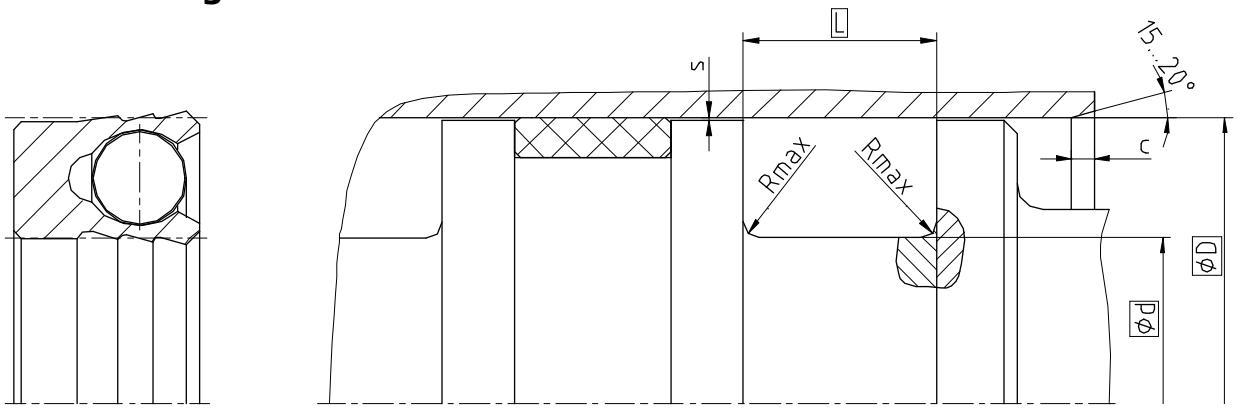

Surface roughness	Rtmax	Ra
Sliding Surface	≤ 2 µm	0,05...0,3 µm
Bottom of groove	≤ 6,3 µm	≤ 1,6 µm
Groove face	≤ 15 µm	≤ 3 µm

Ordering dimensions...☐

Bearing area: 50...95% and a cutting depth of 0,5xRz based on Cref = 0%

Standard dimensions

ØD H9	**Ød** h10	**L** +0,2	**Rmax**	**c**	**max. radial extrusion gap s***			
					20 bar	100 bar	200 bar	400 bar
≥ 9 ... ≤ 15	D - 4	3,5	0,4	2,0	0,25	0,12	0,10	0,07
> 15 ... ≤ 30	D - 6	5,0	0,4	3,0	0,35	0,17	0,12	0,08
> 30 ... ≤ 120	D - 10	8,0	0,4	4,0	0,45	0,22	0,17	0,10
> 120 ... ≤ 200	D - 15	11,5	0,4	5,0	0,75	0,40	0,33	0,18
> 200 ... ≤ 250	D - 20	13,0	0,4	6,0	0,87	0,48	0,38	0,20
> 250 ... ≤ 500	D - 25	18,5	0,4	8,5	0,87	0,48	0,38	0,20
> 500 ... ≤ 1600	D - 30	23,0	0,4	10,0	0,87	0,48	0,38	0,20

* Extrusion gap applies to a temperature of 70 °C, higher temperatures require lower values.

Operating parameters

Sealing material	Spring	Temperature	max. speed	max. pressure[1]
SKF ECOFLON 1	**1.4310**	**-200 °C...+260 °C**	**1 m/s**	200 bar (20 MPa)
SKF ECOFLON 2 **SKF ECOFLON 3** SKF ECOFLON 4				**400 bar (40 MPa)**
SKF ECOWEAR 1000		-200 °C...+80 °C	0,5 m/s	200 bar (20 MPa)

The stated operation conditions represent general indications. It is recommended not to use all maximum values simultaneously. Surface speed limits apply only to the presence of adequate lubrication film.

[1] Pressure ratings depend on the size of the extrusion gap.

Ordering example

K03-S, D=100mm, d=90mm, L=8mm, SKF ECOFLON 3 / 1.4310

Piston Seal K03-S	**100 x 90 x 8**	**SKF ECOFLON 3 / 1.4310**
Profile	D x d x L	Sealing material / Spring

Seal data sheet

Piston seals

K04-P

Seal housing

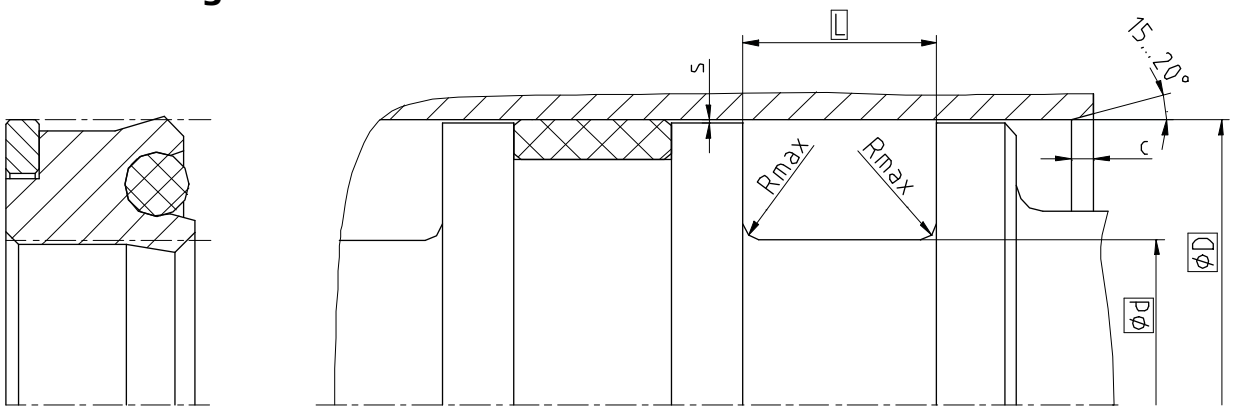

Surface roughness	Rtmax	Ra
Sliding Surface	≤ 2,5 µm	0,1...0,5 µm
Bottom of groove	≤ 6,3 µm	≤ 1,6 µm
Groove face	≤ 15 µm	≤ 3 µm

Ordering dimensions...□

Bearing area: 50...95% and a cutting depth of 0,5xRz based on Cref = 0%

Standard dimensions

ØD H9	**Ød** h10	**L** +0,2	**Rmax**	**c**	**max. radial extrusion gap s***			
					20 bar	100 bar	400 bar	700 bar
≥ 13 ... ≤ 25	D - 8	6,0	0,4	3,5	0,80	0,80	0,30	0,04
> 25 ... ≤ 50	D - 10	7,0	0,4	4,0	1,00	1,00	0,37	0,04
> 50 ... ≤ 75	D - 12	8,0	0,4	4,5	1,25	1,24	0,42	0,05
> 75 ... ≤ 150	D - 15	10,0	0,4	5,0	1,50	1,47	0,46	0,05
> 150 ... ≤ 300	D - 20	12,0	0,4	6,0	2,00	1,77	0,54	0,06
> 300 ... ≤ 500	D - 25	18,0	0,4	8,5	2,50	2,06	0,62	0,06
> 500 ... ≤ 600	D - 30	20,0	0,4	10,0	3,00	2,43	0,76	0,06

* Extrusion gap applies to a temperature of 70 °C, higher temperatures require lower values.

Operating parameters

Sealing material	Energizer	Backup ring	Temperature	max. speed	max. pressure[1]
ECOPUR®	**NBR70**	**SKF ECOTAL** SKF ECOMID[2]	**-30 °C...+100 °C**	**0,5 m/s**	**700 bar (70 MPa)**
H-ECOPUR™			-20 °C...+100 °C		
S-ECOPUR™				0,7 m/s	
T-ECOPUR™	MVQ70		-40 °C...+100 °C	0,5 m/s	

The stated operation conditions represent general indications. It is recommended not to use all maximum values simultaneously. Surface speed limits apply only to the presence of adequate lubrication film.

[1] Pressure ratings depend on the size of the extrusion gap.

[2] ≤ Ø260mm: SKF ECOTAL ; > Ø260mm: SKF ECOMID

Ordering example

K04-P, D=100mm, d=85mm, L=10mm, ECOPUR® / NBR70 / SKF ECOTAL

Piston Seal K04-P	**100 x 85 x 10**	**ECOPUR® / NBR70 / SKF ECOTAL**
Profile	D x d x L	Sealing material / Energizer / Backup ring

Seal data sheet

Piston seals

K04-PD

Seal housing

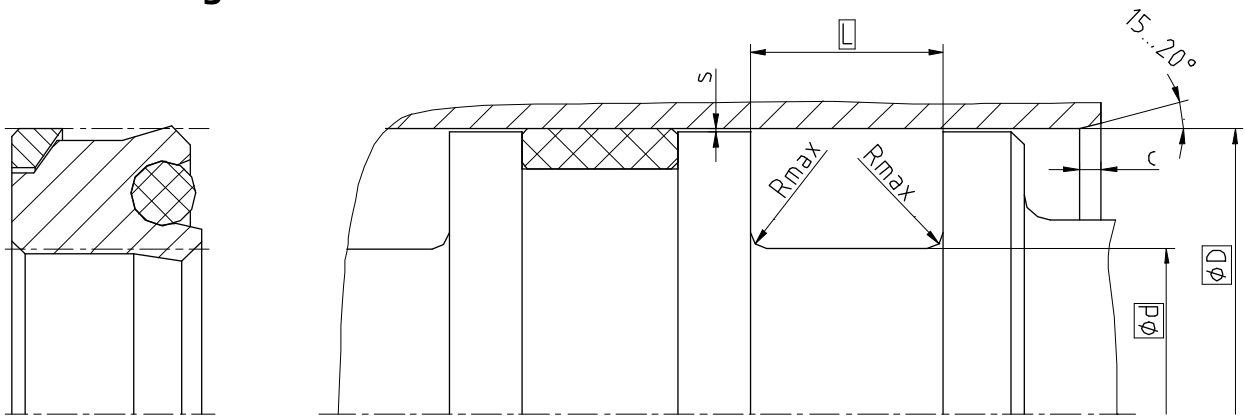

Surface roughness	Rtmax	Ra
Sliding Surface	≤ 2,5 µm	0,1...0,5 µm
Bottom of groove	≤ 6,3 µm	≤ 1,6 µm
Groove face	≤ 15 µm	≤ 3 µm

Ordering dimensions...☐

Bearing area: 50...95% and a cutting depth of 0,5xRz based on Cref = 0%

Standard dimensions

ØD H9	**Ød** h10	**L** +0,2	**Rmax**	**c**	**max. radial extrusion gap s***			
					20 bar	100 bar	400 bar	700 bar
≥ 13 ... ≤ 25	D - 8	6,0	0,4	3,5	0,80	0,80	0,30	0,04
> 25 ... ≤ 50	D - 10	7,0	0,4	4,0	1,00	1,00	0,37	0,04
> 50 ... ≤ 75	D - 12	8,0	0,4	4,5	1,25	1,24	0,42	0,05
> 75 ... ≤ 150	D - 15	10,0	0,4	5,0	1,50	1,47	0,46	0,05
> 150 ... ≤ 300	D - 20	12,0	0,4	6,0	2,00	1,77	0,54	0,06
> 300 ... ≤ 500	D - 25	18,0	0,4	8,5	2,50	2,06	0,62	0,06
> 500 ... ≤ 600	D - 30	20,0	0,4	10,0	3,00	2,43	0,76	0,06

* Extrusion gap applies to a temperature of 70 °C, higher temperatures require lower values.

Operating parameters

Sealing material	Energizer	Backup ring	Temperature	max. speed	max. pressure[1]
ECOPUR®	**NBR70**	**SKF ECOTAL** SKF ECOMID[2]	**-30 °C...+100 °C**	**0,5 m/s**	**700 bar (70 MPa)**
H-ECOPUR™			-20 °C...+100 °C		
S-ECOPUR™				0,7 m/s	
T-ECOPUR™	MVQ70		-40 °C...+100 °C	0,5 m/s	

The stated operation conditions represent general indications. It is recommended not to use all maximum values simultaneously. Surface speed limits apply only to the presence of adequate lubrication film.

[1] Pressure ratings depend on the size of the extrusion gap.

[2] ≤ Ø260mm: SKF ECOTAL ; > Ø260mm: SKF ECOMID

Ordering example

K04-PD, D=100mm, d=85mm, L=10mm, ECOPUR® / NBR70 / SKF ECOTAL

Piston Seal K04-PD	**100 x 85 x 10**	**ECOPUR® / NBR70 / SKF ECOTAL**
Profile	D x d x L	Sealing material / Energizer / Backup ring

Seal data sheet

Piston seals

K05-P

Seal housing

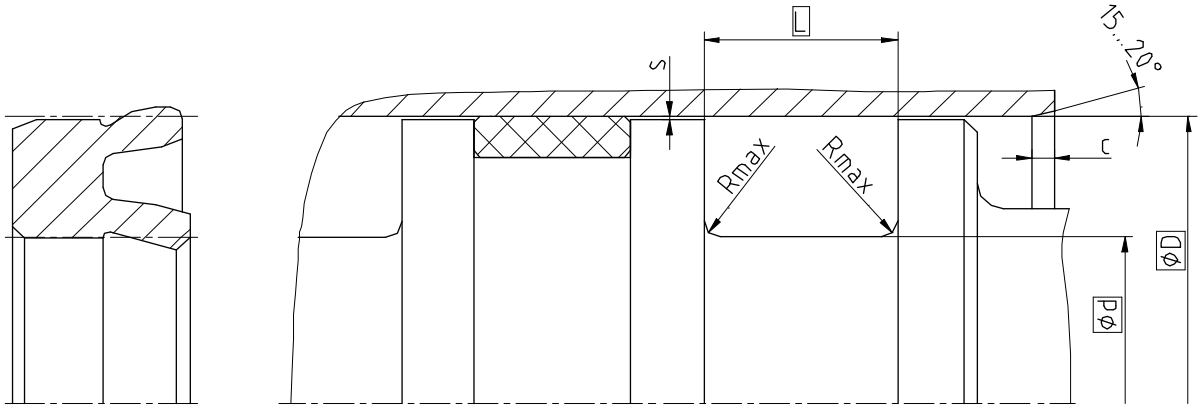

Surface roughness	Rtmax	Ra
Sliding Surface	≤ 2,5 µm	0,1...0,5 µm
Bottom of groove	≤ 6,3 µm	≤ 1,6 µm
Groove face	≤ 15 µm	≤ 3 µm

Ordering dimensions...☐

Bearing area: 50...95% and a cutting depth of 0,5xRz based on Cref = 0%

Standard dimensions

ØD H9	**Ød** h10	**L** +0,2	**Rmax**	**c**	**s***
≥ 13 ... ≤ 25	D - 8	6,0	0,4	3,5	0,33
> 25 ... ≤ 50	D - 10	7,0	0,4	4,0	0,37
> 50 ... ≤ 75	D - 12	8,0	0,4	4,5	0,42
> 75 ... ≤ 150	D - 15	10,0	0,4	5,0	0,46
> 150 ... ≤ 300	D - 20	12,0	0,4	6,0	0,54
> 300 ... ≤ 500	D - 25	18,0	0,4	8,5	0,61
> 500 ... ≤ 750	D - 30	20,0	0,4	10,0	0,67
> 750	D - 40	26,0	0,4	13,0	0,67

* Extrusion gap applies to a temperature of 70 °C, higher temperatures require lower values.

Operating parameters

Sealing material	Temperature	max. speed	max. pressure
ECOPUR®	**-30 °C...+110 °C**	**1 m/s**	**25 bar (2,5 MPa)**
H-ECOPUR™	-20 °C...+110 °C		
S-ECOPUR™		2 m/s	
T-ECOPUR™	-50 °C...+110 °C	1 m/s	
G-ECOPUR™	-30 °C...+110 °C		

The stated operation conditions represent general indications. It is recommended not to use all maximum values simultaneously. Surface speed limits apply only to the presence of adequate lubrication film.

Ordering example

K05-P, D=100mm, d=85mm, L=10mm, ECOPUR®

Piston Seal K05-P	**100 x 85 x 10**	**ECOPUR®**
Profile	D x d x L	Sealing material

Seal data sheet

Piston seals

K05-R

Seal housing

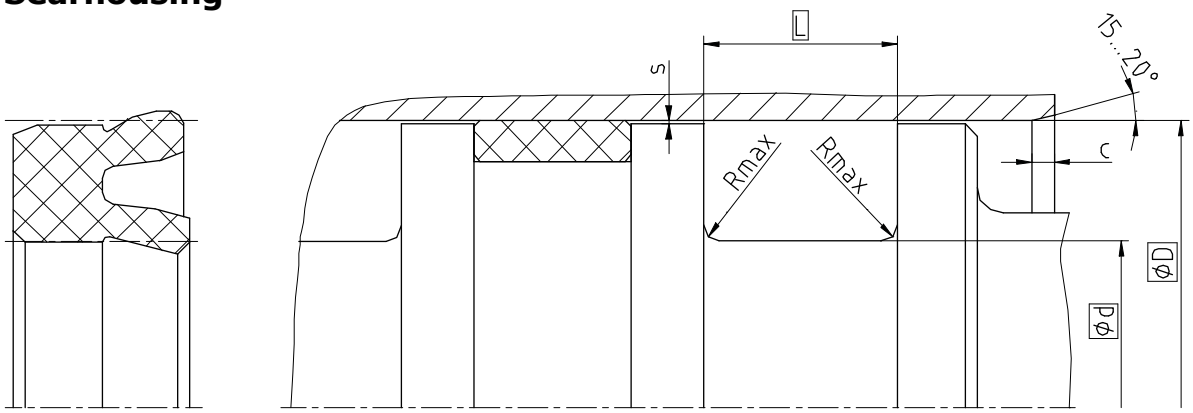

Surface roughness	Rtmax	Ra
Sliding Surface	≤ 2,5 µm	0,1...0,5 µm
Bottom of groove	≤ 6,3 µm	≤ 1,6 µm
Groove face	≤ 15 µm	≤ 3 µm

Ordering dimensions...☐

Bearing area: 50...95% and a cutting depth of 0,5xRz based on Cref = 0%

Standard dimensions

ØD H9	**Ød** h10	**L** +0,2	**Rmax**	**c**	**s***
≥ 13 ... ≤ 25	D - 8	6,0	0,4	3,5	0,33
> 25 ... ≤ 50	D - 10	7,0	0,4	4,0	0,37
> 50 ... ≤ 75	D - 12	8,0	0,4	4,5	0,42
> 75 ... ≤ 150	D - 15	10,0	0,4	5,0	0,46
> 150 ... ≤ 300	D - 20	12,0	0,4	6,0	0,54
> 300 ... ≤ 500	D - 25	18,0	0,4	8,5	0,61
> 500 ... ≤ 750	D - 30	20,0	0,4	10,0	0,67
> 750	D - 40	26,0	0,4	13,0	0,67

* Extrusion gap applies to a temperature of 70 °C, higher temperatures require lower values.

Operating parameters

Sealing material	Temperature	max. speed	max. pressure
SKF ECORUBBER-1	**-30 °C...+100 °C**	**1 m/s**	**25 bar (2,5 MPa)**
SKF ECORUBBER-2	-20 °C...+200 °C		
SKF ECORUBBER-3	-50 °C...+150 °C		
SKF ECORUBBER-H	-25 °C...+150 °C		
SKF ECOFLAS	-10 °C...+200 °C		

The stated operation conditions represent general indications. It is recommended not to use all maximum values simultaneously. Surface speed limits apply only to the presence of adequate lubrication film.

Ordering example

K05-R, D=100mm, d=85mm, L=10mm, SKF ECORUBBER-1

Piston Seal K05-R	**100 x 85 x 10**	**SKF ECORUBBER-1**
Profile	D x d x L	Sealing material

Seal data sheet

Piston seals

K06-P

Seal housing

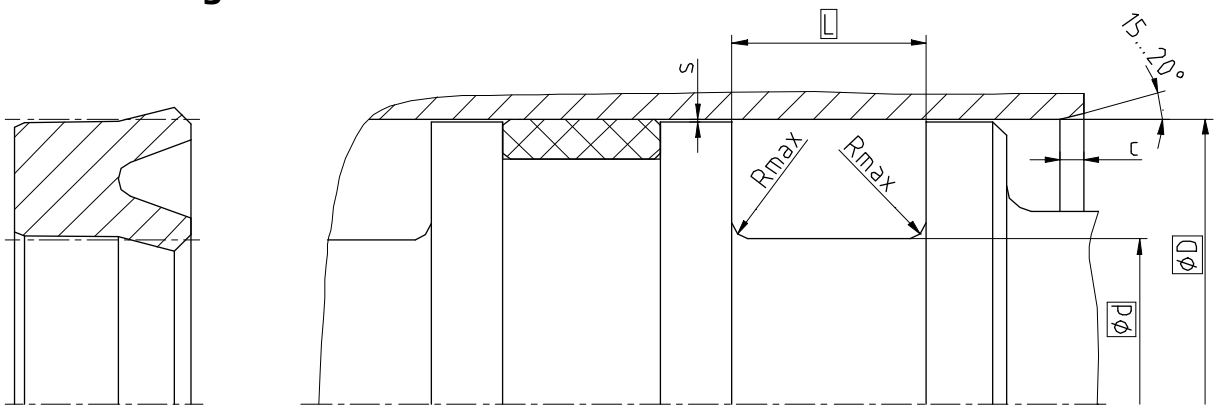

Surface roughness	Rtmax	Ra
Sliding Surface	≤ 2,5 µm	0,1...0,5 µm
Bottom of groove	≤ 6,3 µm	≤ 1,6 µm
Groove face	≤ 15 µm	≤ 3 µm

Ordering dimensions...□

Bearing area: 50...95% and a cutting depth of 0,5xRz based on Cref = 0%

Standard dimensions

ØD H9	**Ød** h10	**L** +0,2	**Rmax**	**c**	**max. radial extrusion gap s***			
					20 bar	100 bar	200 bar	400 bar
≥ 14 ... ≤ 25	D - 8	6,0	0,4	3,5	0,33	0,18	0,11	0,05
> 25 ... ≤ 50	D - 10	7,0	0,4	4,0	0,37	0,22	0,16	0,10
> 50 ... ≤ 75	D - 12	8,0	0,4	4,5	0,42	0,27	0,20	0,14
> 75 ... ≤ 150	D - 15	10,0	0,4	5,0	0,46	0,31	0,25	0,19
> 150 ... ≤ 300	D - 20	12,0	0,4	6,0	0,54	0,39	0,32	0,26
> 300 ... ≤ 500	D - 25	18,0	0,4	8,5	0,61	0,46	0,39	0,33
> 500 ... ≤ 750	D - 30	20,0	0,4	10,0	0,67	0,52	0,45	0,39
> 750	D - 40	26,0	0,4	13,0	0,67	0,52	0,45	0,39

* Extrusion gap applies to a temperature of 70 °C, higher temperatures require lower values.

Operating parameters

Sealing material	Temperature	max. speed	max. pressure[1]
ECOPUR®	**-30 °C...+110 °C**	**0,5 m/s**	**400 bar (40 MPa)**
H-ECOPUR™	-20 °C...+110 °C		
S-ECOPUR™		0,7 m/s	
T-ECOPUR™	-50 °C...+110 °C	0,5 m/s	
G-ECOPUR™	-30 °C...+110 °C		

The stated operation conditions represent general indications. It is recommended not to use all maximum values simultaneously. Surface speed limits apply only to the presence of adequate lubrication film.

[1] Pressure ratings depend on the size of the extrusion gap.

Ordering example

K06-P, D=100mm, d=85mm, L=10mm, ECOPUR

Piston Seal K06-P	**100 x 85 x 10**	**ECOPUR®**
Profile	D x d x L	Sealing material

Seal data sheet

Piston seals

K06-R

Seal housing

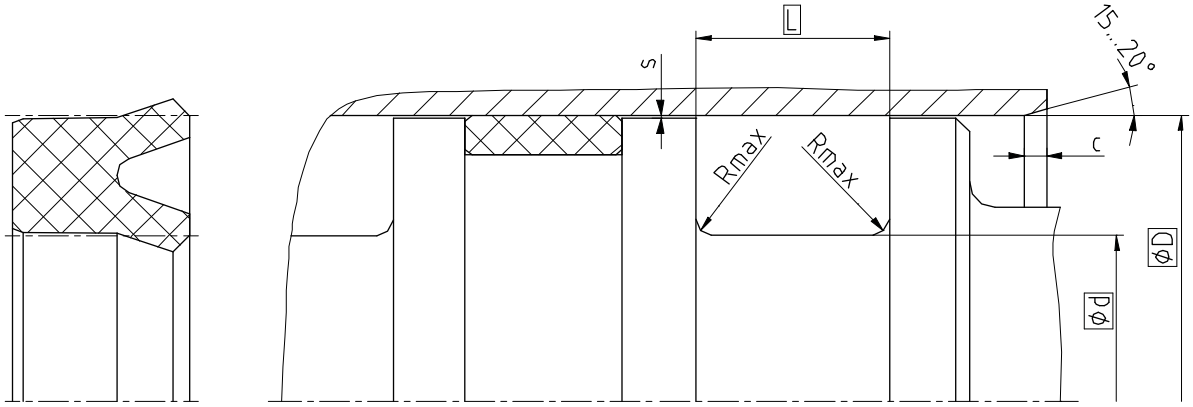

Surface roughness	Rtmax	Ra
Sliding Surface	≤ 2,5 µm	0,1...0,5 µm
Bottom of groove	≤ 6,3 µm	≤ 1,6 µm
Groove face	≤ 15 µm	≤ 3 µm

Ordering dimensions...☐

Bearing area: 50...95% and a cutting depth of 0,5xRz based on Cref = 0%

Standard dimensions

ØD H9	**Ød** h10	**L** +0,2	**Rmax**	**c**	**max. radial extrusion gap s***		
					20 bar	100 bar	160 bar
≥ 14 ... ≤ 25	D - 8	6,0	0,4	3,5	0,23	0,16	0,14
> 25 ... ≤ 50	D - 10	7,0	0,4	4,0	0,26	0,19	0,17
> 50 ... ≤ 75	D - 12	8,0	0,4	4,5	0,29	0,22	0,20
> 75 ... ≤ 150	D - 15	10,0	0,4	5,0	0,31	0,24	0,22
> 150 ... ≤ 300	D - 20	12,0	0,4	6,0	0,34	0,27	0,25
> 300 ... ≤ 500	D - 25	18,0	0,4	8,5	0,37	0,30	0,29
> 500 ... ≤ 750	D - 30	20,0	0,4	10,0	0,40	0,34	0,32
> 750	D - 40	26,0	0,4	13,0	0,40	0,34	0,32

* Extrusion gap applies to a temperature of 70 °C, higher temperatures require lower values.

Operating parameters

Sealing material	Temperature	max. speed	max. pressure[1]
SKF ECORUBBER-1	**-30 °C...+100 °C**	**0,5 m/s**	**160 bar (16 MPa)**
SKF ECORUBBER-2	-20 °C...+200 °C		
SKF ECORUBBER-3	-50 °C...+150 °C		
SKF ECORUBBER-H	-25 °C...+150 °C		
SKF ECOSIL	-60 °C...+200 °C	-	-
SKF ECOFLAS	0 °C...+200 °C	0,5 m/s	160 bar (16 MPa)

The stated operation conditions represent general indications. It is recommended not to use all maximum values simultaneously. Surface speed limits apply only to the presence of adequate lubrication film.

[1] Pressure ratings depend on the size of the extrusion gap.

Ordering example

K06-R, D=100mm, d=85mm, L=10mm, SKF ECORUBBER-1

Piston Seal K06-R	**100 x 85 x 10**	**SKF ECORUBBER-1**
Profile	D x d x L	Sealing material

Seal data sheet

Piston seals

K07-P

Seal housing

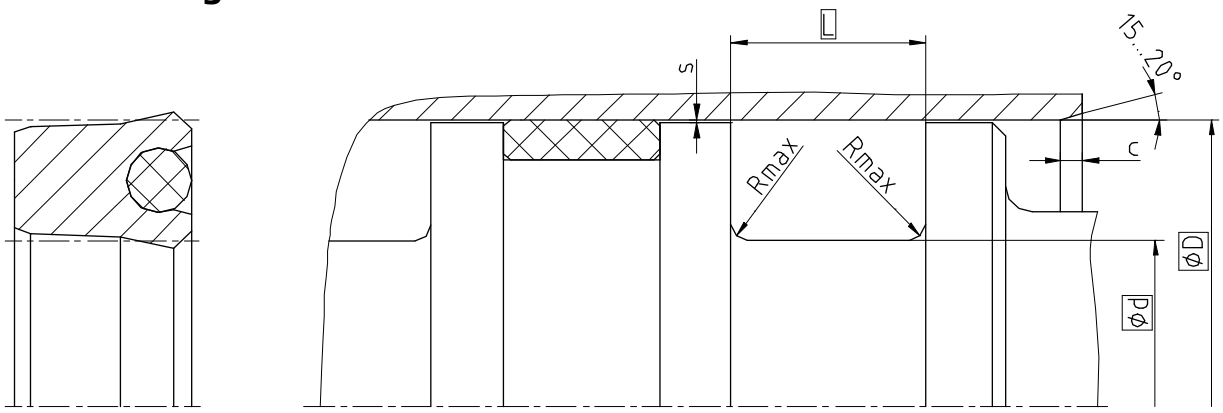

Surface roughness	Rtmax	Ra
Sliding Surface	≤ 2,5 µm	0,1...0,5 µm
Bottom of groove	≤ 6,3 µm	≤ 1,6 µm
Groove face	≤ 15 µm	≤ 3 µm

Ordering dimensions...☐

Bearing area: 50...95% and a cutting depth of 0,5xRz based on Cref = 0%

Standard dimensions

ØD H9	**Ød** h10	**L** +0,2	**Rmax**	**c**	**max. radial extrusion gap s***			
					20 bar	100 bar	200 bar	400 bar
≥ 13 ... ≤ 25	D - 8	6,0	0,4	3,5	0,33	0,18	0,11	0,05
> 25 ... ≤ 50	D - 10	7,0	0,4	4,0	0,37	0,22	0,16	0,10
> 50 ... ≤ 75	D - 12	8,0	0,4	4,5	0,42	0,27	0,20	0,14
> 75 ... ≤ 150	D - 15	10,0	0,4	5,0	0,46	0,31	0,25	0,19
> 150 ... ≤ 300	D - 20	12,0	0,4	6,0	0,54	0,39	0,32	0,26
> 300 ... ≤ 500	D - 25	18,0	0,4	8,5	0,61	0,46	0,39	0,33
> 500 ... ≤ 600	D - 30	20,0	0,4	10,0	0,67	0,52	0,45	0,39

* Extrusion gap applies to a temperature of 70 °C, higher temperatures require lower values.

Operating parameters

Sealing material	Energizer	Temperature	max. speed	max. pressure[1]
ECOPUR®	**NBR70**	**-30 °C...+100 °C**	**0,5 m/s**	**400 bar (40 MPa)**
H-ECOPUR™		-20 °C...+100 °C		
S-ECOPUR™			0,7 m/s	
T-ECOPUR™	MVQ70	-50 °C...+110 °C	0,5 m/s	

The stated operation conditions represent general indications. It is recommended not to use all maximum values simultaneously. Surface speed limits apply only to the presence of adequate lubrication film.

[1] Pressure ratings depend on the size of the extrusion gap.

Ordering example

K07-P, D=100mm, d=85mm, L=10mm, ECOPUR® / NBR70

Piston Seal K07-P	**100 x 85 x 10**	**ECOPUR® / NBR70**
Profile	D x d x L	Sealing material / Energizer

Seal data sheet

Piston seals

K07-F

Seal housing

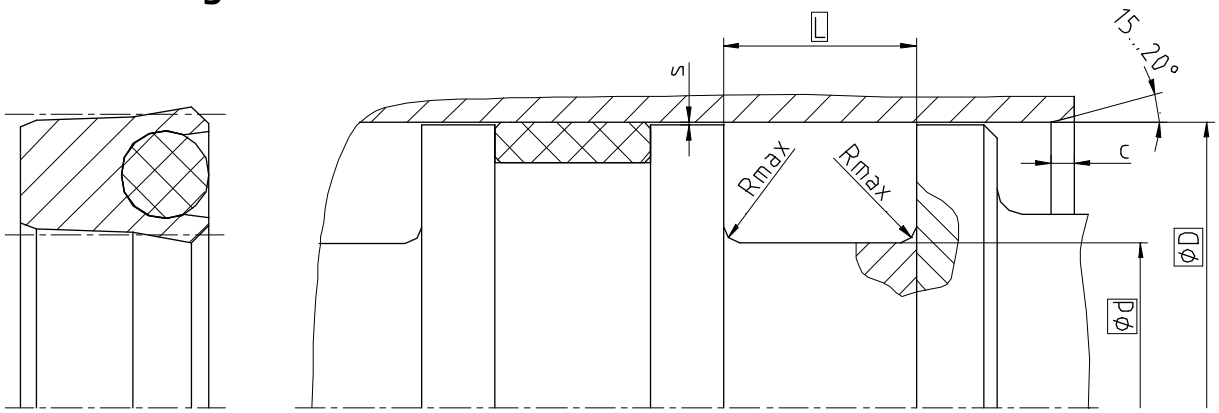

Surface roughness	Rtmax	Ra
Sliding Surface	≤ 2 µm	0,05...0,3 µm
Bottom of groove	≤ 6,3 µm	≤ 1,6 µm
Groove face	≤ 15 µm	≤ 3 µm

Ordering dimensions...☐

Bearing area: 50...95% and a cutting depth of 0,5xRz based on Cref = 0%

Standard dimensions

ØD H9	**Ød** h10	**L** +0,2	**Rmax**	**c**	**max. radial extrusion gap s***			
					20 bar	100 bar	200 bar	400 bar
≥ 13 ... ≤ 25	D - 8	6,4	0,4	3,5	0,25	0,12	0,10	0,07
> 25 ... ≤ 50	D - 10	8,5	0,4	4,0	0,35	0,17	0,12	0,08
> 50 ... ≤ 75	D - 12	10,0	0,4	4,5	0,45	0,22	0,17	0,10
> 75 ... ≤ 150	D - 15	12,3	0,4	5,0	0,75	0,40	0,33	0,18
> 150 ... ≤ 300	D - 20	16,0	0,4	6,0	0,87	0,48	0,38	0,20
> 300 ... ≤ 500	D - 25	19,8	0,4	8,5	0,87	0,48	0,38	0,20
> 500 ... ≤ 600	D - 30	24,5	0,4	10,0	0,87	0,48	0,38	0,20

* Extrusion gap applies to a temperature of 70 °C, higher temperatures require lower values.

Operating parameters

Sealing material	Energizer	Temperature	max. speed	max. pressure[1]
SKF ECOFLON 1 SKF ECOFLON 2 **SKF ECOFLON 3** SKF ECOFLON 4	MVQ70	-55 °C...+200 °C	**1,0 m/s**	**200 bar (20 MPa)**
	NBR70	-30 °C...+100 °C		400 bar (40 MPa)
	FPM75	**-20 °C...+200 °C**		
	EPDM70	-50 °C...+150 °C		
SKF ECOWEAR 1000	NBR70	-30 °C...+80 °C	0,5 m/s	200 bar (20 MPa)
	FPM75	-20 °C...+80 °C		
	EPDM70	-50 °C...+80 °C		
	MVQ70	-55 °C...+80 °C		

The stated operation conditions represent general indications. It is recommended not to use all maximum values simultaneously. Surface speed limits apply only to the presence of adequate lubrication film.

[1] Pressure ratings depend on the size of the extrusion gap.

Ordering example

K07-F, D=100mm, d=85mm, L=12,3mm, SKF ECOFLON 3 / FPM75

Piston Seal K07-F	**100 x 85 x 12,3**	**SKF ECOFLON 3 / FPM75**
Profile	D x d x L	Sealing material / Energizer

Seal data sheet

Piston seals

K08-D X-Slide

Seal housing

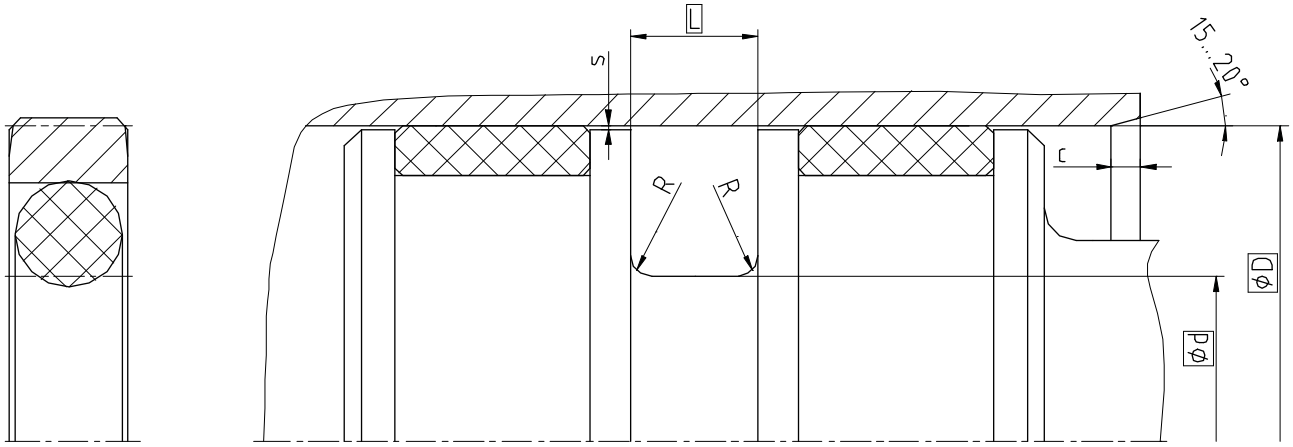

Surface roughness	Rtmax	Ra
Sliding Surface	≤ 2,5 µm	0,1...0,5 µm
Bottom of groove	≤ 6,3 µm	≤ 1,6 µm
Groove face	≤ 15 µm	≤ 3 µm

Ordering dimensions...□

Bearing area: 50...95% and a cutting depth of 0,5xRz based on Cref = 0%

Standard dimensions

ØD H9	**Ød** h10	**L** +0,2	**R**	**c**	**ØOD**	**max. radial extrusion gap s***			
						100 bar	200 bar	400 bar	600 bar
≥ 10 ... < 15	D - 4,9	2,2	0,4	2,5	1,78	0,30	0,30	0,20	0,10
≥ 15 ... < 40	D - 7,5	3,2	0,6	3,5	2,62	0,40	0,30	0,20	0,10
≥ 40 ... < 80	D - 11	4,2	1,0	4,5	3,53	0,50	0,40	0,30	0,20
≥ 80 ... < 133	D - 15,5	6,3	1,3	5,0	5,33	0,50	0,40	0,30	0,20
≥ 133 ... < 330	D - 21	8,1	1,8	6,0	7,00	0,70	0,50	0,40	0,20
≥ 330 ... < 670	D - 24,5	8,1	1,8	8,0	7,00	0,70	0,50	0,40	0,20
≥ 670 ... < 1000	D - 28	9,5	2,5	10,0	8,40	0,80	0,70	0,50	0,30
≥ 1000 ... ≤ 3000	D - 38	13,8	3,0	12,0	12,00	1,10	0,80	0,70	0,40

* The extrusion gap referred to is valid up to 80 °C and valid for the side opposite to the pressure side; higher temperatures require lower values.

Operating parameters

Sealing material	Energizer	Temperature	max. speed	max. pressure[1]
X-ECOPUR™ XH-ECOPUR™ XS-ECOPUR™ G-ECOPUR 54D™	**NBR70**	**-30 °C...+100 °C**	**5 m/s**	**600 bar (60 MPa)**
	MVQ70	-55 °C...+110 °C		
SKF ECOWEAR 1000	NBR70	-30 °C...+80 °C		400 bar (40 MPa)
	MVQ70	-55 °C...+80 °C		

The stated operation conditions represent general indications. It is recommended not to use all maximum values simultaneously. Surface speed limits apply only to the presence of adequate lubrication film.

[1] Pressure ratings depend on the size of the extrusion gap.

Ordering example

X-Slide K08-D, D=100mm, d=84,5mm, L=6,3mm, X-ECOPUR™ / NBR70

X-Slide K08-D	**100 x 84,5 x 6,3**	**X-ECOPUR™ / NBR70**
Profile	D x d x L	Sealing material / Energizer

Seal data sheet

Piston seals

K08-D F-Slide

Seal housing

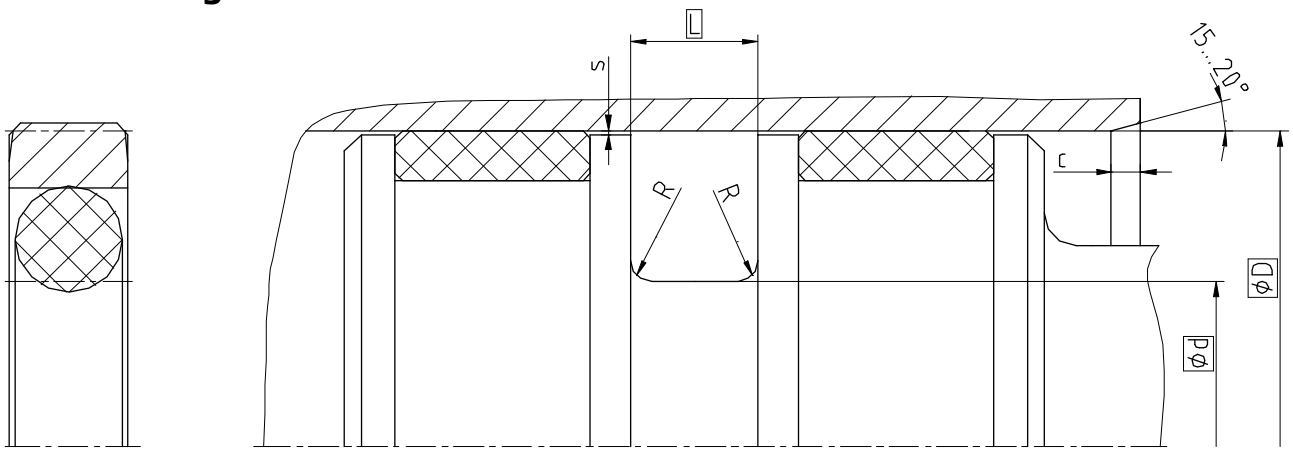

Surface roughness	Rtmax	Ra
Sliding Surface	≤ 2 µm	0,05...0,3 µm
Bottom of groove	≤ 6,3 µm	≤ 1,6 µm
Groove face	≤ 15 µm	≤ 3 µm

Ordering dimensions...□

Bearing area: 50...95% and a cutting depth of 0,5xRz based on Cref = 0%

Standard dimensions

ØD H9	**Ød** h10	**L** +0,2	**R**	**c**	**ØOD**	**max. radial extrusion gap s***			
						100 bar	200 bar	400 bar	600 bar
≥ 10 ... < 15	D - 4,9	2,2	0,4	2,5	1,78	0,30	0,20	0,15	0,05
≥ 15 ... < 40	D - 7,5	3,2	0,6	3,5	2,62	0,40	0,25	0,15	0,05
≥ 40 ... < 80	D - 11	4,2	1,0	4,5	3,53	0,40	0,25	0,20	0,10
≥ 80 ... < 133	D - 15,5	6,3	1,3	5,0	5,33	0,50	0,30	0,20	0,10
≥ 133 ... < 330	D - 21	8,1	1,8	6,0	7,00	0,60	0,35	0,25	0,15
≥ 330 ... < 670	D - 24,5	8,1	1,8	8,0	7,00	0,60	0,35	0,25	0,15
≥ 670 ... < 1000	D - 28	9,5	2,5	10,0	8,40	0,70	0,50	0,30	0,20
≥ 1000 ... ≤ 2000	D - 38	13,8	3,0	12,0	12,00	1,00	0,70	0,60	0,30

* The extrusion gap referred to is valid up to 80 °C and valid for the side opposite to the pressure side; higher temperatures require lower values.

Operating parameters

Sealing material	Energizer	Temperature	max. speed	max. pressure[1]
SKF ECOFLON 2 SKF ECOFLON 3 **SKF ECOFLON 3F** SKF ECOFLON 4	**NBR70**	**-30 °C...+100 °C**	**10 m/s**	**600 bar (60 MPa)**
	FKM70	-20 °C...+200 °C		

The stated operation conditions represent general indications. It is recommended not to use all maximum values simultaneously. Surface speed limits apply only to the presence of adequate lubrication film.

[1] Pressure ratings depend on the size of the extrusion gap.

Ordering example

F-Slide K08-D, D=100mm, d=84,5mm, L=6,3mm, SKF ECOFLON 3F / NBR70

F-Slide K08-D	**100 x 84,5 x 6,3**	**SKF ECOFLON 3F / NBR70**
Profile	D x d x L	Sealing material / Energizer

Seal data sheet

Piston seals

K08-DS X-Slide

Seal housing

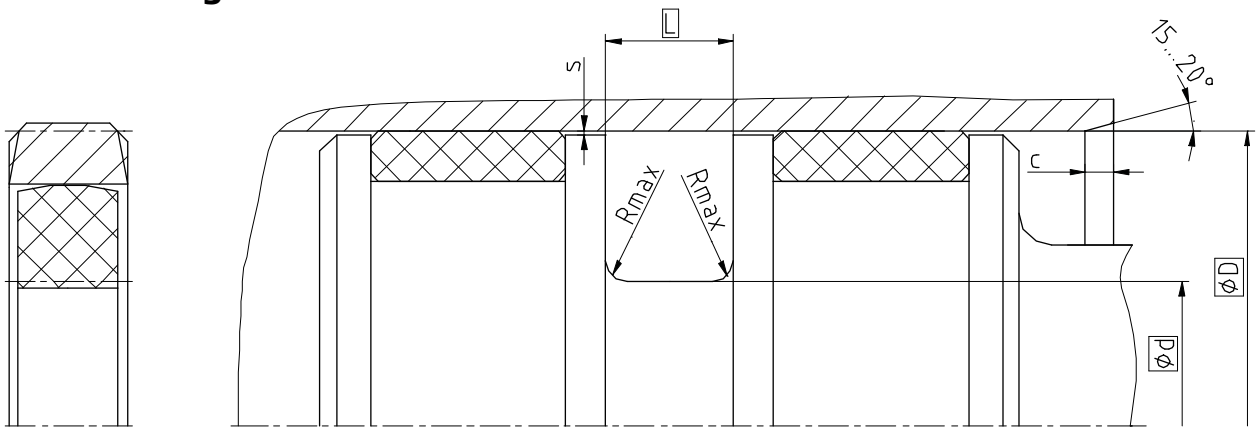

Surface roughness	Rtmax	Ra
Sliding Surface	≤ 2,5 µm	0,1...0,5 µm
Bottom of groove	≤ 6,3 µm	≤ 1,6 µm
Groove face	≤ 15 µm	≤ 3 µm

Ordering dimensions...☐

Bearing area: 50...95% and a cutting depth of 0,5xRz based on Cref = 0%

Standard dimensions

ØD H9	**Ød** h10	**L** +0,2	**Rmax**	**c**	**max. radial extrusion gap s***			
					100 bar	200 bar	400 bar	600 bar
≥ 15 ... < 50	D - 10	5,0	0,3	4,0	0,50	0,40	0,30	0,20
≥ 50 ... < 60	D - 15	7,5	0,4	5,0	0,50	0,40	0,30	0,20
≥ 60 ... < 200	D - 20	10,0	0,4	6,0	0,70	0,50	0,40	0,20
≥ 200 ... < 300	D - 25	12,5	0,4	8,5	0,80	0,60	0,50	0,30
≥ 300 ... < 530	D - 30	15,0	0,8	10,0	0,90	0,70	0,60	0,30
≥ 530 ... < 680	D - 35	17,5	1,2	13,0	1,00	0,80	0,70	0,30
≥ 680 ... ≤ 1500	D - 40	20,0	1,2	15,0	1,10	0,90	0,80	0,40

* The extrusion gap referred to is valid up to 80 °C and valid for the side opposite to the pressure side; higher temperatures require lower values.

Operating parameters

Sealing material	Energizer	Temperature	max. speed	max. pressure[1]
X-ECOPUR™ XH-ECOPUR™ XS-ECOPUR™ G-ECOPUR 54D™	**SKF ECORUBBER-1**	**-30 °C...+100 °C**	**5 m/s**	**600 bar (60 MPa)**
	SKF ECOSIL	-60 °C...+100 °C		
SKF ECOWEAR 1000	SKF ECORUBBER-1	-30 °C...+80 °C		400 bar (40 MPa)
	SKF ECOSIL	-60 °C...+80 °C		

The stated operation conditions represent general indications. It is recommended not to use all maximum values simultaneously. Surface speed limits apply only to the presence of adequate lubrication film.

[1]Pressure ratings depend on the size of the extrusion gap.

Ordering example

X-Slide K08-DS, D=100mm, d=80mm, L=10mm, X-ECOPUR™ / SKF ECORUBBER-1

X-Slide K08-DS	**100 x 80 x 10**	**X-ECOPUR™ / SKF ECORUBBER-1**
Profile	D x d x L	Sealing material / Energizer

Seal data sheet

Piston seals

K08-DS F-Slide

Seal housing

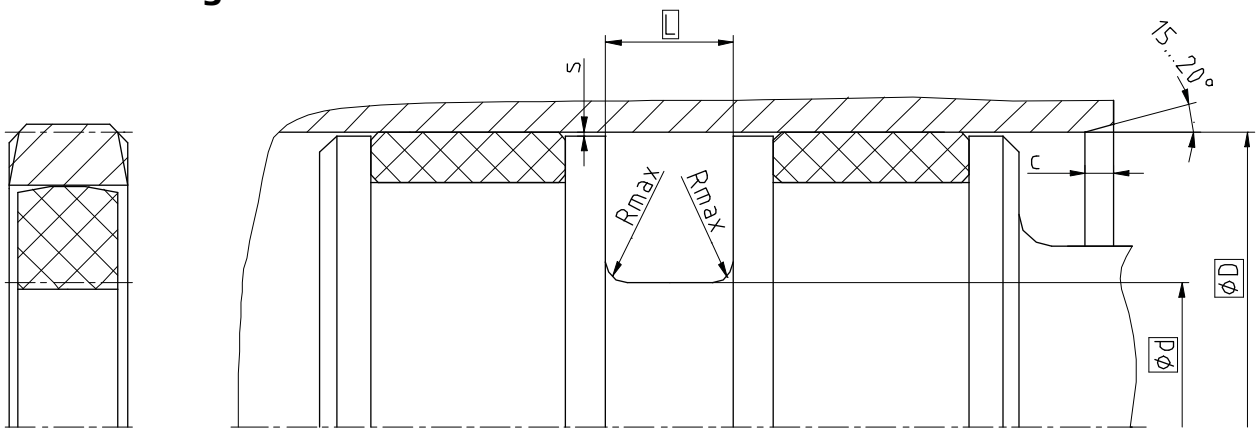

Surface roughness	Rtmax	Ra
Sliding Surface	≤ 2 µm	0,05...0,3 µm
Bottom of groove	≤ 6,3 µm	≤ 1,6 µm
Groove face	≤ 15 µm	≤ 3 µm

Ordering dimensions...☐

Bearing area: 50...95% and a cutting depth of 0,5xRz based on Cref = 0%

Standard dimensions

ØD H9	**Ød** h10	**L** +0,2	**Rmax**	**c**	**max. radial extrusion gap s***			
					100 bar	200 bar	400 bar	600 bar
≥ 15 ... < 50	D - 10	5,0	0,3	4,0	0,40	0,30	0,20	0,10
≥ 50 ... < 60	D - 15	7,5	0,4	5,0	0,50	0,30	0,20	0,10
≥ 60 ... < 200	D - 20	10,0	0,4	6,0	0,60	0,40	0,25	0,15
≥ 200 ... < 300	D - 25	12,5	0,4	8,5	0,60	0,40	0,25	0,15
≥ 300 ... < 530	D - 30	15,0	0,8	10,0	0,70	0,50	0,30	0,20
≥ 530 ... < 680	D - 35	17,5	1,2	13,0	0,80	0,60	0,50	0,20
≥ 680 ... ≤ 1500	D - 40	20,0	1,2	15,0	1,00	0,70	0,60	0,30

* The extrusion gap referred to is valid up to 80 °C and valid for the side opposite to the pressure side; higher temperatures require lower values.

Operating parameters

Sealing material	Energizer	Temperature	max. speed	max. pressure[1]
SKF ECOFLON 2 SKF ECOFLON 3 **SKF ECOFLON 3F** SKF ECOFLON 4	**SKF ECORUBBER-1**	**-30 °C...+100 °C**	**10 m/s**	**600 bar (60 MPa)**
	SKF ECORUBBER-2	-20 °C...+200 °C		

The stated operation conditions represent general indications. It is recommended not to use all maximum values simultaneously. Surface speed limits apply only to the presence of adequate lubrication film.

[1] Pressure ratings depend on the size of the extrusion gap.

Ordering example

F-Slide K08-DS, D=100mm, d=80mm, L=10mm, SKF ECOFLON 3F / SKF ECORUBBER-1

F-Slide K08-DS	**100 x 80 x 10**	**SKF ECOFLON 3F / SKF ECORUBBER-1**
Profile	D x d x L	Sealing material / Energizer

Seal data sheet

Piston seals

K08-E X-Slide

Seal housing

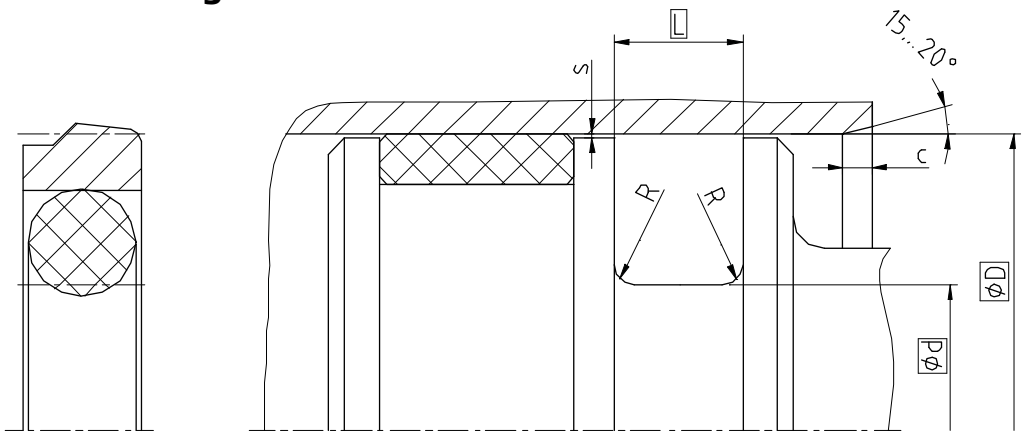

Surface roughness	Rtmax	Ra
Sliding Surface	≤ 2,5 µm	0,1...0,5 µm
Bottom of groove	≤ 6,3 µm	≤ 1,6 µm
Groove face	≤ 15 µm	≤ 3 µm

Ordering dimensions...☐

Bearing area: 50...95% and a cutting depth of 0,5xRz based on Cref = 0%

Standard dimensions

ØD H9	**Ød** h10	**L** +0,2	**R**	**c**	**ØOD**	**max. radial extrusion gap s***			
						100 bar	200 bar	400 bar	600 bar
≥ 10 ... < 15	D - 4,9	2,2	0,4	2,5	1,78	0,30	0,30	0,20	0,10
≥ 15 ... < 40	D - 7,5	3,2	0,6	3,5	2,62	0,40	0,30	0,20	0,10
≥ 40 ... < 80	D - 11	4,2	1,0	4,5	3,53	0,50	0,40	0,30	0,20
≥ 80 ... < 133	D - 15,5	6,3	1,3	5,0	5,33	0,50	0,40	0,30	0,20
≥ 133 ... < 330	D - 21	8,1	1,8	6,0	7,00	0,70	0,50	0,40	0,20
≥ 330 ... < 670	D - 24,5	8,1	1,8	8,0	7,00	0,70	0,50	0,40	0,20
≥ 670 ... < 1000	D - 28	9,5	2,5	10,0	8,40	0,80	0,70	0,50	0,30
≥ 1000 ... ≤ 3000	D - 38	13,8	3,0	12,0	12,00	1,10	0,80	0,70	0,40

* The extrusion gap referred to is valid up to 80 °C and valid for the side opposite to the pressure side; higher temperatures require lower values.

Operating parameters

Sealing material	Energizer	Temperature	max. speed	max. pressure[1]
X-ECOPUR™ XH-ECOPUR™ XS-ECOPUR™ G-ECOPUR 54D™	**NBR70**	**-30 °C...+100 °C**	**5 m/s**	**600 bar (60 MPa)**
	MVQ70	-55 °C...+110 °C		
SKF ECOWEAR 1000	NBR70	-30 °C...+80 °C		400 bar (40 MPa)
	MVQ70	-55 °C...+80 °C		

The stated operation conditions represent general indications. It is recommended not to use all maximum values simultaneously. Surface speed limits apply only to the presence of adequate lubrication film.

[1] Pressure ratings depend on the size of the extrusion gap.

Ordering example

X-Slide K08-E, D=100mm, d=84,9mm, L=6,3mm, X-ECOPUR™ / NBR70

X-Slide K08-E	**100 x 84,9 x 6,3**	**X-ECOPUR™ / NBR70**
Profile	D x d x L	Sealing material / Energizer

Seal data sheet

Piston seals

K08-E F-Slide

Seal housing

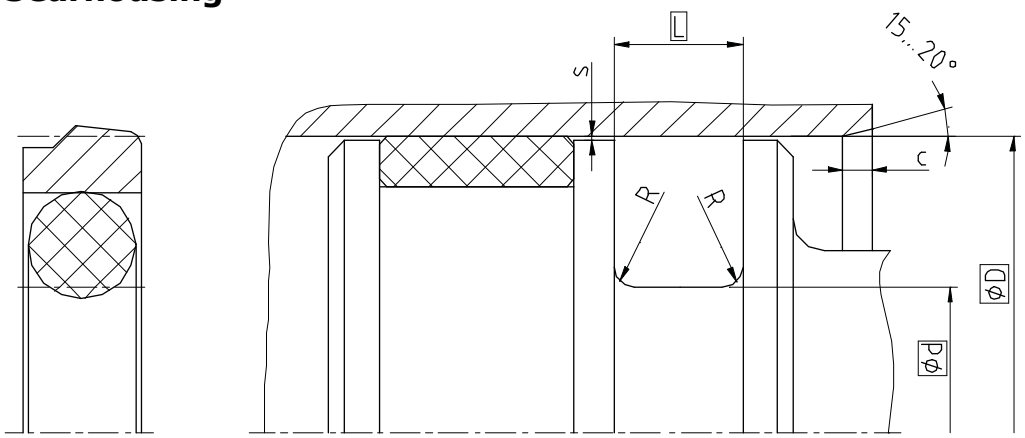

Surface roughness	Rtmax	Ra
Sliding Surface	≤ 2 µm	0,05...0,3 µm
Bottom of groove	≤ 6,3 µm	≤ 1,6 µm
Groove face	≤ 15 µm	≤ 3 µm

Ordering dimensions...☐

Bearing area: 50...95% and a cutting depth of 0,5xRz based on Cref = 0%

Standard dimensions

ØD H9	**Ød** h10	**L** +0,2	**R**	**c**	**ØOD**	**max. radial extrusion gap s***			
						100 bar	200 bar	400 bar	600 bar
≥ 10 ... < 15	D - 4,9	2,2	0,4	2,5	1,78	0,30	0,20	0,15	0,05
≥ 15 ... < 40	D - 7,5	3,2	0,6	3,5	2,62	0,40	0,25	0,15	0,05
≥ 40 ... < 80	D - 11	4,2	1,0	4,5	3,53	0,40	0,25	0,20	0,10
≥ 80 ... < 133	D - 15,5	6,3	1,3	5,0	5,33	0,50	0,30	0,20	0,10
≥ 133 ... < 330	D - 21	8,1	1,8	6,0	7,00	0,60	0,35	0,25	0,15
≥ 330 ... < 670	D - 24,5	8,1	1,8	8,0	7,00	0,60	0,35	0,25	0,15
≥ 670 ... < 1000	D - 28	9,5	2,5	10,0	8,40	0,70	0,50	0,30	0,20
≥ 1000 ... ≤ 3000	D - 38	13,8	3,0	12,0	12,00	1,00	0,70	0,60	0,30

* The extrusion gap referred to is valid up to 80 °C and valid for the side opposite to the pressure side; higher temperatures require lower values.

Operating parameters

Sealing material	Energizer	Temperature	max. speed	max. pressure[1]
SKF ECOFLON 2 SKF ECOFLON 3 **SKF ECOFLON 3F** SKF ECOFLON 4	**NBR70**	**-30 °C...+100 °C**	**10 m/s**	**600 bar (60 MPa)**
	FKM70	-20 °C...+200 °C		

The stated operation conditions represent general indications. It is recommended not to use all maximum values simultaneously. Surface speed limits apply only to the presence of adequate lubrication film.

[1] Pressure ratings depend on the size of the extrusion gap.

Ordering example

F-Slide K08-E, D=100mm, d=84,9mm, L=6,3mm, SKF ECOFLON 3F / NBR70

F-Slide K08-E	**100 x 84,9 x 6,3**	**SKF ECOFLON 3F / NBR70**
Profile	D x d x L	Sealing material / Energizer

Seal data sheet

Piston seals

K08-ES X-Slide

Seal housing

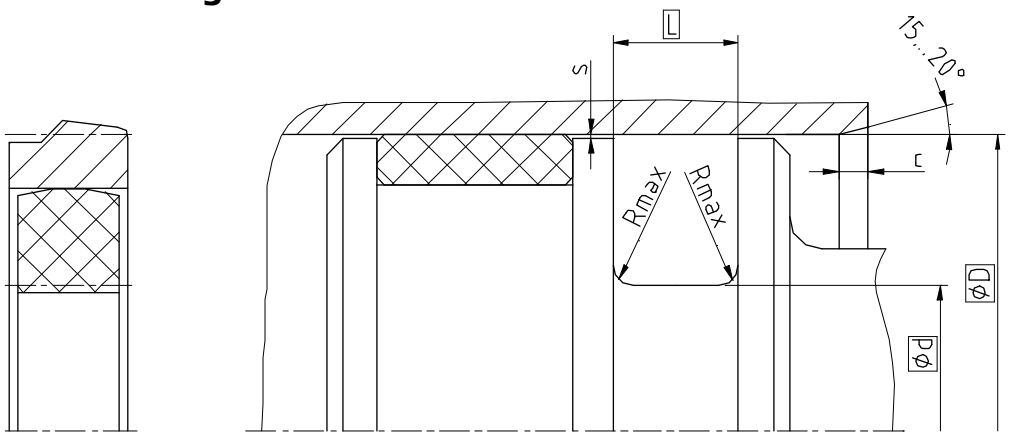

Surface roughness	Rtmax	Ra
Sliding Surface	≤ 2,5 µm	0,1...0,5 µm
Bottom of groove	≤ 6,3 µm	≤ 1,6 µm
Groove face	≤ 15 µm	≤ 3 µm

Ordering dimensions...☐

Bearing area: 50...95% and a cutting depth of 0,5xRz based on Cref = 0%

Standard dimensions

ØD H9	**Ød** h10	**L** +0,2	**Rmax**	**c**	**max. radial extrusion gap s***			
					100 bar	200 bar	400 bar	600 bar
≥ 15 ... < 50	D - 10	5,0	0,3	4,0	0,50	0,40	0,30	0,20
≥ 50 ... < 60	D - 15	7,5	0,4	5,0	0,50	0,40	0,30	0,20
≥ 60 ... < 200	D - 20	10,0	0,4	6,0	0,70	0,50	0,40	0,20
≥ 200 ... < 300	D - 25	12,5	0,4	8,5	0,80	0,60	0,50	0,30
≥ 300 ... < 530	D - 30	15,0	0,8	10,0	0,90	0,70	0,60	0,30
≥ 530 ... < 680	D - 35	17,5	1,2	13,0	1,00	0,80	0,70	0,30
≥ 680 ... ≤ 1500	D - 40	20,0	1,2	15,0	1,10	0,90	0,80	0,40

* The extrusion gap referred to is valid up to 80 °C and valid for the side opposite to the pressure side; higher temperatures require lower values.

Operating parameters

Sealing material	Energizer	Temperature	max. speed	max. pressure[1]
X-ECOPUR™ XH-ECOPUR™ XS-ECOPUR™ G-ECOPUR 54D™	**SKF ECORUBBER-1**	**-30 °C...+100 °C**	**5 m/s**	**600 bar (60 MPa)**
	SKF ECOSIL	-60 °C...+100 °C		
SKF ECOWEAR 1000	SKF ECORUBBER-1	-30 °C...+80 °C		400 bar (40 MPa)
	SKF ECOSIL	-55 °C...+80 °C		

The stated operation conditions represent general indications. It is recommended not to use all maximum values simultaneously. Surface speed limits apply only to the presence of adequate lubrication film.

[1] Pressure ratings depend on the size of the extrusion gap.

Ordering example

X-Slide K08-ES, D=100mm, d=80mm, L=10mm, X-ECOPUR™ / SKF ECORUBBER-1

X-Slide K08-ES	**100 x 80 x 10**	**X-ECOPUR™ / SKF ECORUBBER-1**
Profile	D x d x L	Sealing material / Energizer

Seal data sheet

Piston seals

K08-ES F-Slide

Seal housing

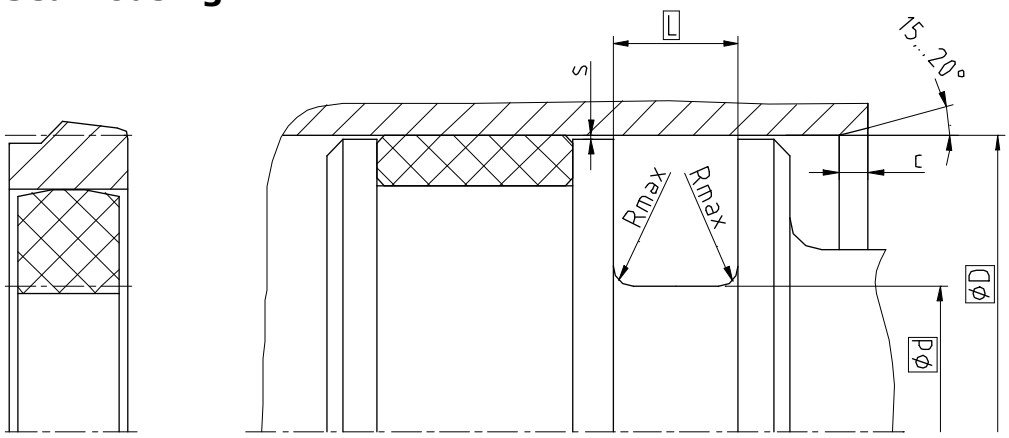

Surface roughness	Rtmax	Ra
Sliding Surface	≤ 2 µm	0,05...0,3 µm
Bottom of groove	≤ 6,3 µm	≤ 1,6 µm
Groove face	≤ 15 µm	≤ 3 µm

Ordering dimensions...☐

Bearing area: 50...95% and a cutting depth of 0,5xRz based on Cref = 0%

Standard dimensions

ØD H9	**Ød** h10	**L** +0,2	**Rmax**	**c**	**max. radial extrusion gap s***			
					100 bar	200 bar	400 bar	600 bar
≥ 15 ... < 50	D - 10	5,0	0,3	4,0	0,40	0,30	0,20	0,10
≥ 50 ... < 60	D - 15	7,5	0,4	5,0	0,50	0,30	0,20	0,10
≥ 60 ... < 200	D - 20	10,0	0,4	6,0	0,60	0,40	0,25	0,15
≥ 200 ... < 300	D - 25	12,5	0,4	8,5	0,60	0,40	0,25	0,15
≥ 300 ... < 530	D - 30	15,0	0,8	10,0	0,70	0,50	0,30	0,20
≥ 530 ... < 680	D - 35	17,5	1,2	13,0	0,80	0,60	0,50	0,20
≥ 680 ... ≤ 1500	D - 40	20,0	1,2	15,0	1,00	0,70	0,60	0,30

* The extrusion gap referred to is valid up to 80 °C and valid for the side opposite to the pressure side; higher temperatures require lower values.

Operating parameters

Sealing material	Energizer	Temperature	max. speed	max. pressure[1]
SKF ECOFLON 2 SKF ECOFLON 3 **SKF ECOFLON 3F** SKF ECOFLON 4	**SKF ECORUBBER-1**	**-30 °C...+100 °C**	**10 m/s**	**600 bar (60 MPa)**
	SKF ECORUBBER-2	-20 °C...+200 °C		

The stated operation conditions represent general indications. It is recommended not to use all maximum values simultaneously. Surface speed limits apply only to the presence of adequate lubrication film.
[1] Pressure ratings depend on the size of the extrusion gap.

Ordering example

F-Slide K08-ES, D=100mm, d=80mm, L=10mm, SKF ECOFLON 3F / SKF ECORUBBER-1

F-Slide K08-ES	**100 x 80 x 10**	**SKF ECOFLON 3F / SKF ECORUBBER-1**
Profile	D x d x L	Sealing material / Energizer

Seal data sheet

Piston seals

K08-P

Seal housing

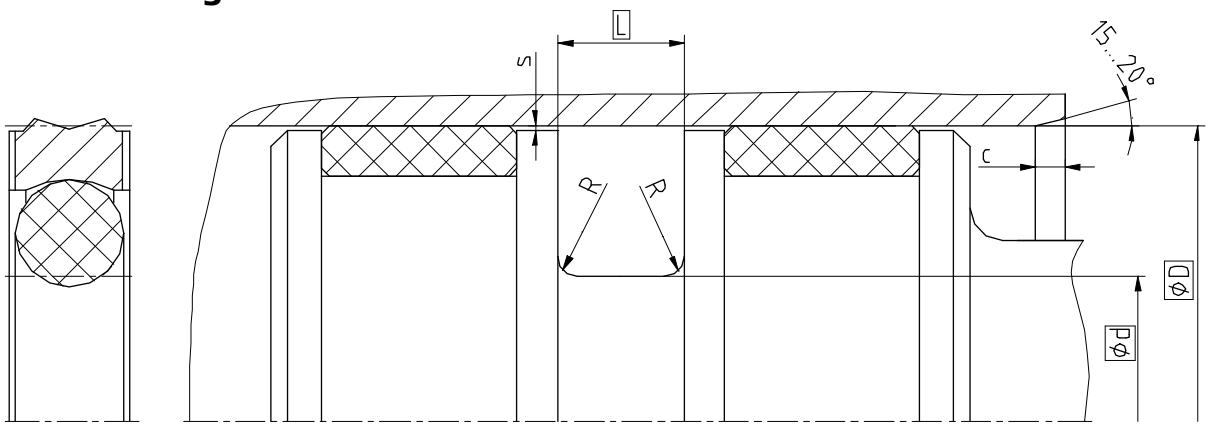

Surface roughness	Rtmax	Ra
Sliding Surface	≤ 2,5 µm	0,1...0,5 µm
Bottom of groove	≤ 6,3 µm	≤ 1,6 µm
Groove face	≤ 15 µm	≤ 3 µm

Ordering dimensions...☐

Bearing area: 50...95% and a cutting depth of 0,5xRz based on Cref = 0%

Standard dimensions

ØD H9	**Ød** h10	**L** +0,2	**R**	**c**	**ØOD**	**max. radial extrusion gap s***		
						20 bar	100 bar	250 bar
≥ 10 ... < 15	D - 4,9	2,2	0,4	2,5	1,78	0,35	0,22	0,13
≥ 15 ... < 40	D - 7,5	3,2	0,6	3,5	2,62	0,5	0,30	0,16
≥ 40 ... < 80	D - 11	4,2	1,0	4,5	3,53	0,6	0,34	0,18
≥ 80 ... < 133	D - 15,5	6,3	1,3	5,0	5,33	0,75	0,40	0,21
≥ 133 ... < 330	D - 21	8,1	1,8	6,0	7,00	0,85	0,45	0,24
≥ 330 ... < 600	D - 24,5	8,1	1,8	8,0	7,00	1,0	0,53	0,28

* Extrusion gap applies to a temperature of 70 °C, higher temperatures require lower values.

Operating parameters

Sealing material	Energizer	Temperature	max. speed	max. pressure[1]
ECOPUR®	**NBR70**	**-30 °C...+100 °C**	**1 m/s**	**250 bar (25 MPa)**
H-ECOPUR™		-20 °C...+110 °C		
S-ECOPUR™			1,4 m/s	
T-ECOPUR™	MVQ70	-50 °C...+110 °C	1 m/s	

The stated operation conditions represent general indications. It is recommended not to use all maximum values simultaneously. Surface speed limits apply only to the presence of adequate lubrication film.

[1] Pressure ratings depend on the size of the extrusion gap.

Ordering example

K08-P, D=100mm, d=84,5mm, L=6,3mm, ECOPUR® / NBR70

Piston Seal K08-P	**100 x 84,5 x 6,3**	**ECOPUR® / NBR70**
Profile	D x d x L	Sealing material / Energizer

Seal data sheet

Piston seals

K09-N

Seal housing

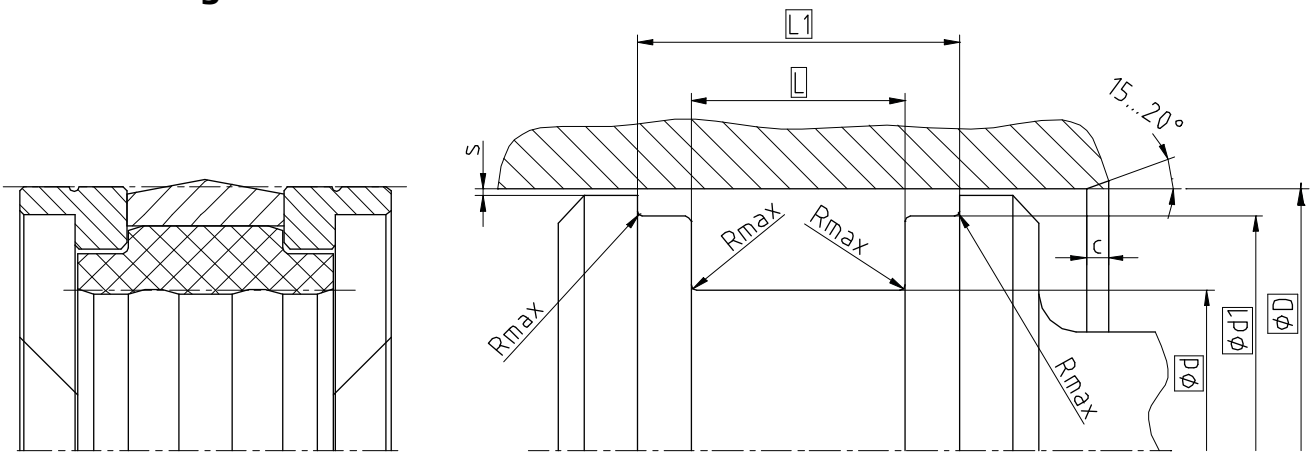

Surface roughness	Rtmax	Ra
Sliding Surface	≤ 2,5 µm	0,1...0,5 µm
Bottom of groove	≤ 6,3 µm	≤ 1,6 µm
Groove face	≤ 15 µm	≤ 3 µm

Ordering dimensions...☐

Bearing area: 50...95% and a cutting depth of 0,5xRz based on Cref = 0%

Standard dimensions

ØD H9	**Ød** h9	**Ød1** h8	**L** +0,2	**L1**	**Rmax**	**c**	**s***
≥ 20 ... < 50	D - 10	D - 3	12,5	20,5	0,4	4	0,35
≥ 50 ... < 80	D - 15	D - 4	20	28	0,4	5	0,52
≥ 80 ... < 150	D - 20	D - 5	25	36	0,4	6	0,65
≥ 150 ... < 400	D - 25	D - 6	32	46	0,4	8,5	0,78
≥ 400 ... < 600	D - 30	D - 8	36	50	0,4	10	1,00

* Extrusion gap applies to a temperature of 70 °C, higher temperatures require lower values.

Operating parameters

Sealing material	Energizer	Backup ring	Temperature	max. speed	max. pressure[1]
ECOPUR®	**SKF ECORUBBER-1**	**SKF ECOTAL** SKF ECOMID[2]	**-30 °C...+100 °C**	**0,5 m/s**	**400 bar (40 MPa)**
H-ECOPUR™			-20 °C...+100 °C	0,7 m/s	
S-ECOPUR™					
T-ECOPUR™	SKF ECOSIL		-40 °C...+100 °C	0,5 m/s	

The stated operation conditions represent general indications. It is recommended not to use all maximum values simultaneously. Surface speed limits apply only to the presence of adequate lubrication film.

[1] Pressure ratings depend on the size of the extrusion gap.

[2] ≤ Ø260mm: SKF ECOTAL ; > Ø260mm: SKF ECOMID

Ordering example

K09-N, D=100mm, d=80mm, d1=95 L=25mm, L1=36mm, ECOPUR® / SKF ECORUBBER-1 / SKF ECOTAL

Piston Seal K09-N	**100 x 80/95 x 25/36**	**ECOPUR® / SKF ECORUBBER-1 / SKF ECOTAL**
Profile	D x d/d1 x L/L1	Sealing material / Energizer / Backup ring

Seal data sheet
Piston seals

K09-H

Seal housing

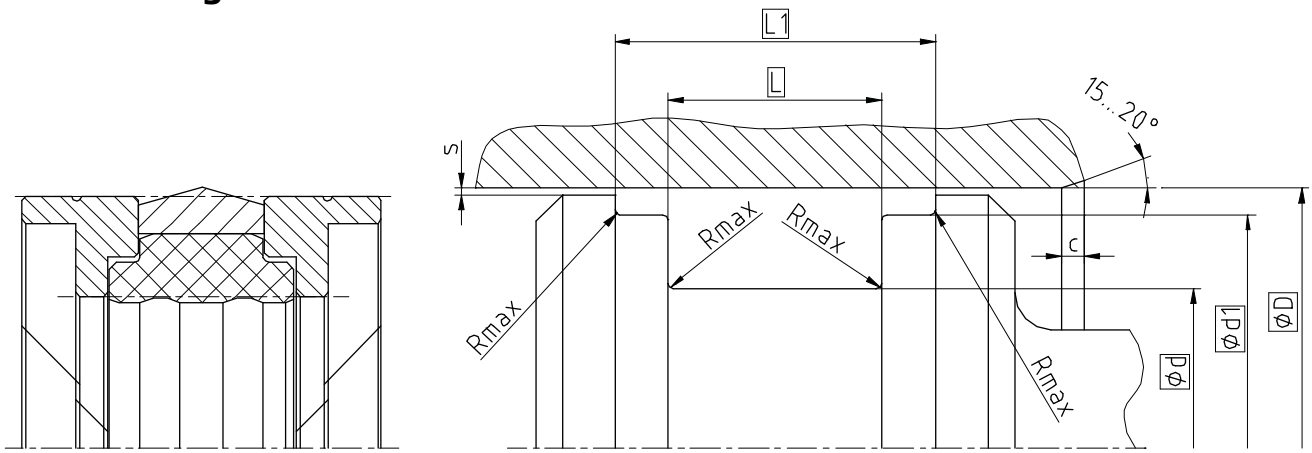

Surface roughness	Rtmax	Ra
Sliding Surface	≤ 2,5 µm	0,1...0,5 µm
Bottom of groove	≤ 6,3 µm	≤ 1,6 µm
Groove face	≤ 15 µm	≤ 3 µm

Ordering dimensions...☐

Bearing area: 50...95% and a cutting depth of 0,5xRz based on Cref = 0%

Standard dimensions

ØD H9	**Ød** h9	**Ød1** h8	**L** +0,2	**L1**	**Rmax**	**c**	**s***
≥ 20 ... < 50	D - 10	D - 3	12,5	20,5	0,4	4	0,4
≥ 50 ... < 80	D - 15	D - 4	20	28	0,4	5	
≥ 80 ... < 150	D - 20	D - 5	25	36	0,4	6	
≥ 150 ... < 400	D - 25	D - 6	32	46	0,4	8,5	
≥ 400 ... < 600	D - 30	D - 8	36	50	0,4	10	

* Extrusion gap applies to a temperature of 70 °C, higher temperatures require lower values.

Operating parameters

Sealing material	Energizer	Backup ring	Temperature	max. speed	max. pressure[1]
ECOPUR®	**SKF ECORUBBER-1**	**SKF ECOTAL** SKF ECOMID[2]	**-30 °C...+100 °C**	**0,3 m/s**	**1500 bar (150 MPa)**
H-ECOPUR™			-20 °C...+100 °C		
S-ECOPUR™				0,4 m/s	
T-ECOPUR™	SKF ECOSIL		-40 °C...+100 °C	0,3 m/s	

The stated operation conditions represent general indications. It is recommended not to use all maximum values simultaneously. Surface speed limits apply only to the presence of adequate lubrication film.

[1] Pressure ratings depend on the size of the extrusion gap.

[2] ≤ Ø260mm: SKF ECOTAL ; > Ø260mm: SKF ECOMID

Ordering example

K09-H, D=100mm, d=80mm, d1=95, L=25mm, L1=36mm, ECOPUR® / SKF ECORUBBER-1 / SKF ECOTAL

Piston Seal K09-D (Profile) **100 x 80/95 x 25/36** (D x d/d1 x L/L1) **ECOPUR® / SKF ECORUBBER-1 / SKF ECOTAL** (Sealing material / Energizer / Backup ring)

Seal data sheet

Piston seals

K09-D

Seal housing

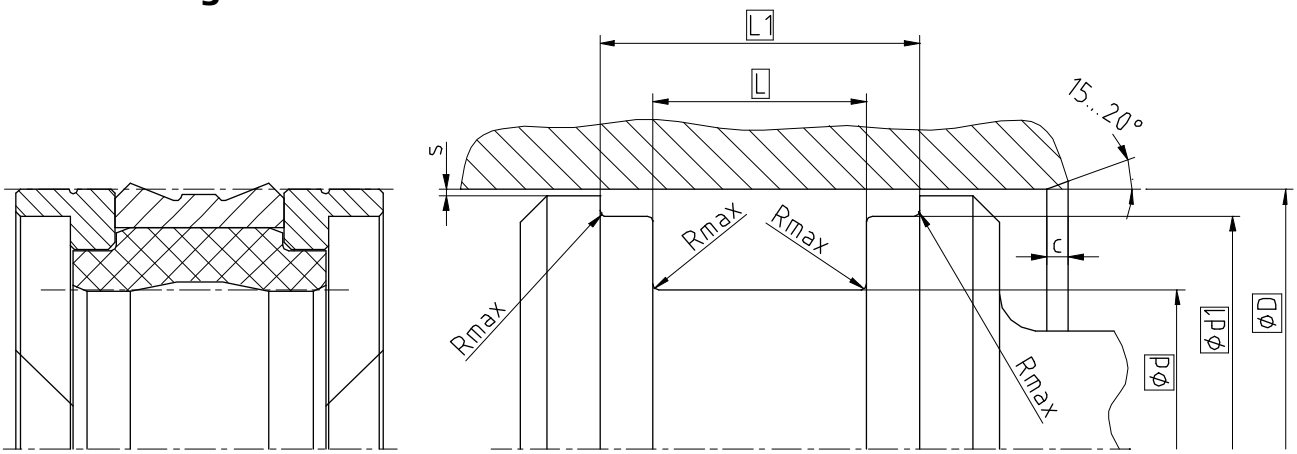

Surface roughness	Rtmax	Ra
Sliding Surface	≤ 2,5 µm	0,1...0,5 µm
Bottom of groove	≤ 6,3 µm	≤ 1,6 µm
Groove face	≤ 15 µm	≤ 3 µm

Ordering dimensions...☐

Bearing area: 50...95% and a cutting depth of 0,5xRz based on Cref = 0%

Standard dimensions

ØD H9	**Ød** h9	**Ød1** h8	**L** +0,2	**L1**	**Rmax**	**c**	**s***
≥ 20 ... < 50	D - 10	D - 3	12,5	20,5	0,4	4	0,35
≥ 50 ... < 80	D - 15	D - 4	20	28	0,4	5	0,52
≥ 80 ... < 150	D - 20	D - 5	25	36	0,4	6	0,65
≥ 150 ... < 400	D - 25	D - 6	32	46	0,4	8,5	0,78
≥ 400 ... < 600	D - 30	D - 8	36	50	0,4	10	1,00

* Extrusion gap applies to a temperature of 70 °C, higher temperatures require lower values.

Operating parameters

Sealing material	Energizer	Backup ring	Temperature	max. speed	max. pressure[1]
ECOPUR®	**SKF ECORUBBER-1**	**SKF ECOTAL** SKF ECOMID[2]	**-30 °C...+100 °C**	**0,5 m/s**	**400 bar (40 MPa)**
H-ECOPUR™			-20 °C...+100 °C		
S-ECOPUR™				0,7 m/s	
T-ECOPUR™	SKF ECOSIL		-40 °C...+100 °C	0,5 m/s	

The stated operation conditions represent general indications. It is recommended not to use all maximum values simultaneously. Surface speed limits apply only to the presence of adequate lubrication film.

[1] Pressure ratings depend on the size of the extrusion gap.

[2] ≤ Ø260mm: SKF ECOTAL ; > Ø260mm: SKF ECOMID

Ordering example

K09-D, D=100mm, d=80mm, d1=95, L=25mm, L1=36mm, ECOPUR® / SKF ECORUBBER-1 / SKF ECOTAL

Piston Seal K09-D (Profile) **100 x 80/95 x 25/36** (D x d/d1 x L/L1) **ECOPUR® / SKF ECORUBBER-1 / SKF ECOTAL** (Sealing material / Energizer / Backup ring)

Seal data sheet

Piston seals

K09-F

Seal housing

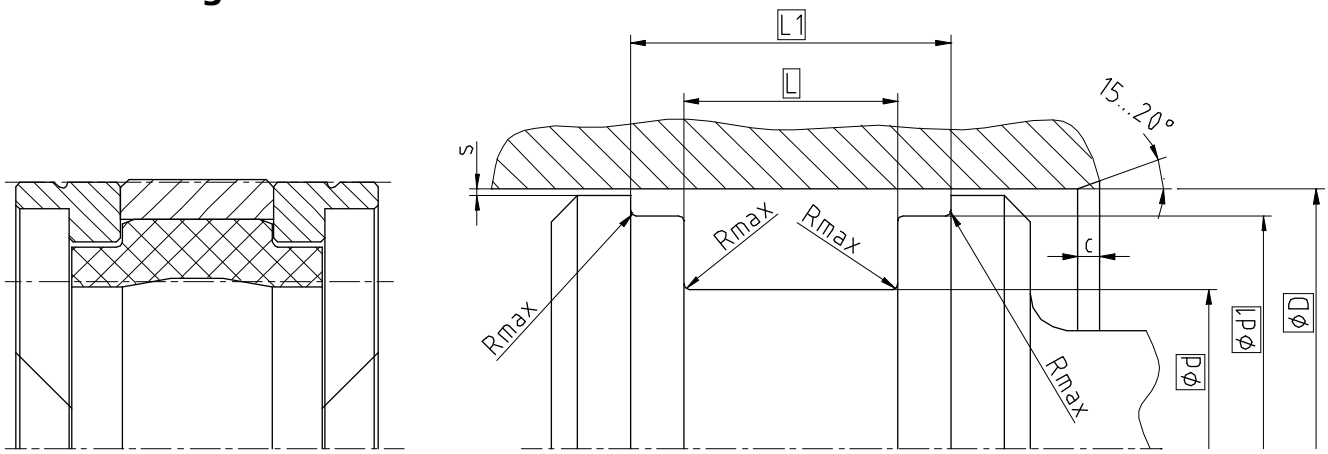

Surface roughness	Rtmax	Ra
Sliding Surface	≤ 2,5 µm	0,1...0,5 µm
Bottom of groove	≤ 6,3 µm	≤ 1,6 µm
Groove face	≤ 15 µm	≤ 3 µm

Ordering dimensions...☐

Bearing area: 50...95% and a cutting depth of 0,5xRz based on Cref = 0%

Standard dimensions

ØD H9	**Ød** h9	**Ød1** h8	**L** +0,2	**L1**	**Rmax**	**c**	**s***
≥ 20 ... < 50	D - 10	D - 3	12,5	20,5	0,4	4	0,35
≥ 50 ... < 80	D - 15	D - 4	20	28	0,4	5	0,50
≥ 80 ... < 150	D - 20	D - 5	25	36	0,4	6	0,65
≥ 150 ... < 400	D - 25	D - 6	32	46	0,4	8,5	0,78
≥ 400 ... ≤ 650	D - 30	D - 8	36	50	0,4	10	1,00

* Extrusion gap applies to a temperature of 70 °C, higher temperatures require lower values.

Operating parameters

Sealing material	Energizer	Backup ring	Temperature	max. speed	max. pressure[1]
X-ECOPUR™	SKF ECORUBBER-1	SKF ECOTAL SKF ECOMID[2]	-30 °C...+100 °C	1 m/s	400 bar (40 Mpa)
XH-ECOPUR™					
XS-ECOPUR™				1,2 m/s	
SKF ECOFLON 2 **SKF ECOFLON 3** SKF ECOFLON 4	**SKF ECORUBBER-1**	**SKF ECOTAL** SKF ECOMID[2]	**-30 °C...+100 °C**	**1,5 m/s**	**400 bar (40 Mpa)**
	SKF ECORUBBER-2	SKF ECOPAEK	-20 °C...+200 °C		

The stated operation conditions represent general indications. It is recommended not to use all maximum values simultaneously. Surface speed limits apply only to the presence of adequate lubrication film.

[1] Pressure ratings depend on the size of the extrusion gap.

[2] ≤ Ø260mm: SKF ECOTAL ; > Ø260mm: SKF ECOMID

Ordering example

K09-F, D=100mm, d=80mm, d1=95 L=25mm, L1=36, SKF ECOFLON 3 / SKF ECORUBBER-1 / SKF ECOTAL

Piston Seal K09-F	**100 x 80/95 x 25/36**	**SKF ECOFLON 3 / SKF ECORUBBER-1 / SKF ECOTAL**
Profile	D x d/d1 x L/L1	Sealing material / Energizer / Backup ring

Seal data sheet

Piston seals

K1012-M

Seal housing

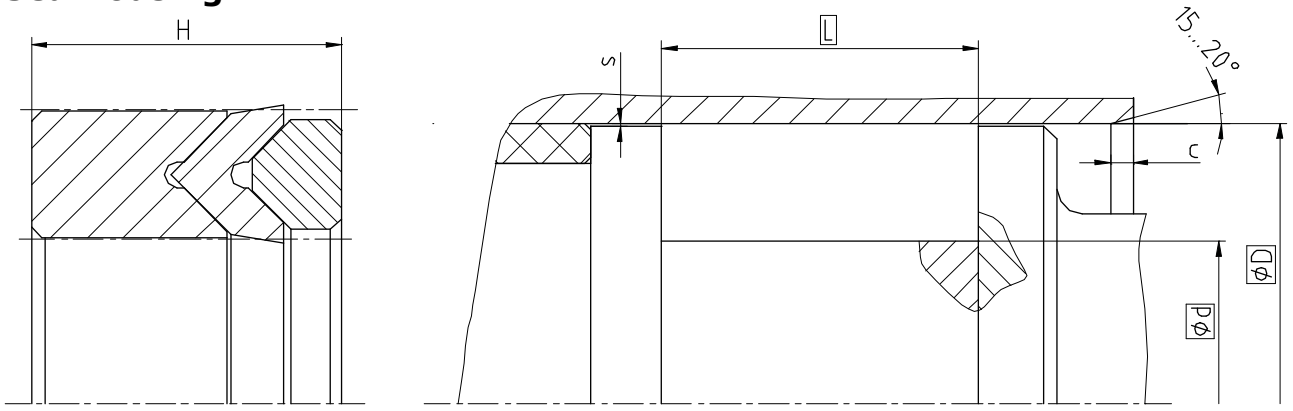

Surface roughness	Rtmax	Ra
Sliding Surface	≤ 2,5 µm	0,1...0,5 µm
Bottom of groove	≤ 6,3 µm	≤ 1,6 µm
Groove face	≤ 15 µm	≤ 3 µm

Ordering dimensions...□

Bearing area: 50...95% and a cutting depth of 0,5xRz based on Cref = 0%

Standard dimensions

ØD H9	**Ød** h10	**L** +0,2	**Rmax**	**c**	**s***
- ... < 40	D - 10	9,5	0,4	4,0	0,25
≥ 40 ... < 75	D - 15	12,3	0,4	5,0	0,37
≥ 75 ... < 150	D - 20	21,2	0,4	6,0	0,50
≥ 150 ... < 200	D - 25	25,8	0,4	8,5	0,62
≥ 200 ... < 300	D - 30	33,5	0,4	10,0	0,75
≥ 300	D - 40	41,5	0,4	13,0	1,00

* Extrusion gap applies to a temperature of 70 °C, higher temperatures require lower values.

Operating parameters

Backup ring K10-A	Chevron K11-T	Pressure ring K12-T	Temperature	max. speed	max. pressure[1]
SKF ECOTAL SKF ECOMID[2]	**ECOPUR®**	**X-ECOPUR™**	**-30 °C...+100 °C**	**0,5 m/s**	**500 bar (50 MPa)**
	H-ECOPUR™	XH-ECOPUR™	-20 °C...+100 °C	0,5 m/s	
	S-ECOPUR™	XS-ECOPUR™	-30 °C...+100 °C	0,7 m/s	
	G-ECOPUR™	G-ECOPUR 54D™	-30 °C...+100 °C	0,5 m/s	
SKF ECOTAL SKF ECOMID[2]	ECOPUR®	SKF ECOTAL SKF ECOMID[2]	-30 °C...+100 °C	0,5 m/s	500 bar (50 MPa)
	H-ECOPUR™		-20 °C...+100 °C	0,5 m/s	
	S-ECOPUR™		-30 °C...+100 °C	0,7 m/s	
	G-ECOPUR™		-30 °C...+100 °C	0,5 m/s	
SKF ECOFLON 2	SKF ECORUBBER-1	SKF ECOFLON 2	-30 °C...+100 °C	0,5 m/s	250 bar (25 MPa)
	SKF ECORUBBER-2		-20 °C...+200 °C	0,5 m/s	
	SKF ECORUBBER-3		-50 °C...+150 °C	0,5 m/s	
	SKF ECORUBBER-H		-25 °C...+150 °C	0,5 m/s	
	SKF ECOFLAS		-10 °C...+200 °C	0,5 m/s	

The stated operation conditions represent general indications. It is recommended not to use all maximum values simultaneously. Surface speed limits apply only to the presence of adequate lubrication film.

[1] Pressure ratings depend on the size of the extrusion gap.

[2] ≤ Ø260mm: SKF ECOTAL ; > Ø260mm: SKF ECOMID

Ordering example

K1012-M, D=100mm, d=80mm, L=21,2mm, SKF ECOTAL / ECOPUR® / X-ECOPUR™

Piston Seal K1012-M	**100 x 80 x 21,2**	**SKF ECOTAL / ECOPUR® / X-ECOPUR™**
Profile	D x d x L	Backup ring / Chevron / Pressure ring

Seal data sheet

Piston seals

K1012-T

Seal housing

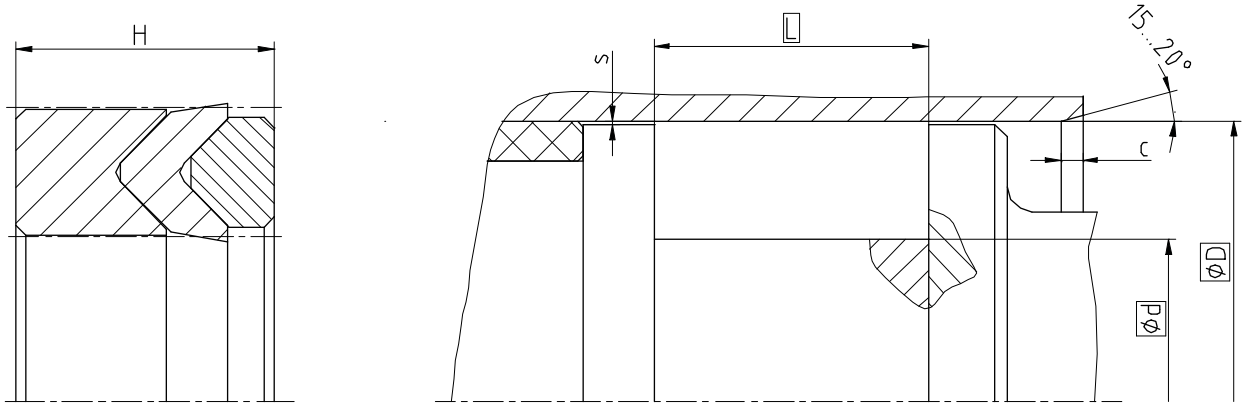

Surface roughness	Rtmax	Ra
Sliding Surface	≤ 2,5 µm	0,1...0,5 µm
Bottom of groove	≤ 6,3 µm	≤ 1,6 µm
Groove face	≤ 15 µm	≤ 3 µm

Ordering dimensions...☐

Bearing area: 50...95% and a cutting depth of 0,5xRz based on Cref = 0%

Standard dimensions

ØD H9	**Ød** h10	**L** +0,2	**Rmax**	**c**	**s***
- ... < 40	D - 10	9,5	0,4	4,0	0,25
≥ 40 ... < 75	D - 15	12,3	0,4	5,0	0,37
≥ 75 ... < 150	D - 20	21,2	0,4	6,0	0,50
≥ 150 ... < 200	D - 25	25,8	0,4	8,5	0,62
≥ 200 ... < 300	D - 30	33,5	0,4	10,0	0,75
≥ 300	D - 40	41,5	0,4	13,0	1,00

* Extrusion gap applies to a temperature of 70 °C, higher temperatures require lower values.

Operating parameters

Backup ring K10-A	Chevron K11-T	Pressure ring K12-T	Temperature	max. speed	max. pressure[1]
SKF ECOTAL SKF ECOMID[2]	**ECOPUR®**	**X-ECOPUR™**	**-30 °C...+100 °C**	**0,5 m/s**	**500 bar (50 MPa)**
	H-ECOPUR™	XH-ECOPUR™	-20 °C...+100 °C	0,5 m/s	
	S-ECOPUR™	XS-ECOPUR™	-30 °C...+100 °C	0,7 m/s	
	G-ECOPUR™	G-ECOPUR 54D™	-30 °C...+100 °C	0,5 m/s	
SKF ECOTAL SKF ECOMID[2]	ECOPUR®	SKF ECOTAL SKF ECOMID[2]	-30 °C...+100 °C	0,5 m/s	500 bar (50 MPa)
	H-ECOPUR™		-20 °C...+100 °C	0,5 m/s	
	S-ECOPUR™		-30 °C...+100 °C	0,7 m/s	
	G-ECOPUR™		-30 °C...+100 °C	0,5 m/s	
SKF ECOFLON 2	SKF ECORUBBER-1	SKF ECOFLON 2	-30 °C...+100 °C	0,5 m/s	250 bar (25 MPa)
	SKF ECORUBBER-2		-20 °C...+200 °C	0,5 m/s	
	SKF ECORUBBER-3		-50 °C...+150 °C	0,5 m/s	
	SKF ECORUBBER-H		-25 °C...+150 °C	0,5 m/s	
	SKF ECOFLAS		-10 °C...+200 °C	0,5 m/s	

The stated operation conditions represent general indications. It is recommended not to use all maximum values simultaneously. Surface speed limits apply only to the presence of adequate lubrication film.

[1] Pressure ratings depend on the size of the extrusion gap.

[2] ≤ Ø260mm: SKF ECOTAL ; > Ø260mm: SKF ECOMID

Ordering example

K1012-T, D=100mm, d=80mm, L=21,2mm, SKF ECOTAL / ECOPUR® / X-ECOPUR™

Piston Seal K1012-T	**100 x 80 x 21,2**	**SKF ECOTAL / ECOPUR® / X-ECOPUR™**
Profile	D x d x L	Backup ring / Chevron / Pressure ring

Seal data sheet

Piston seals

K1315-T

Seal housing

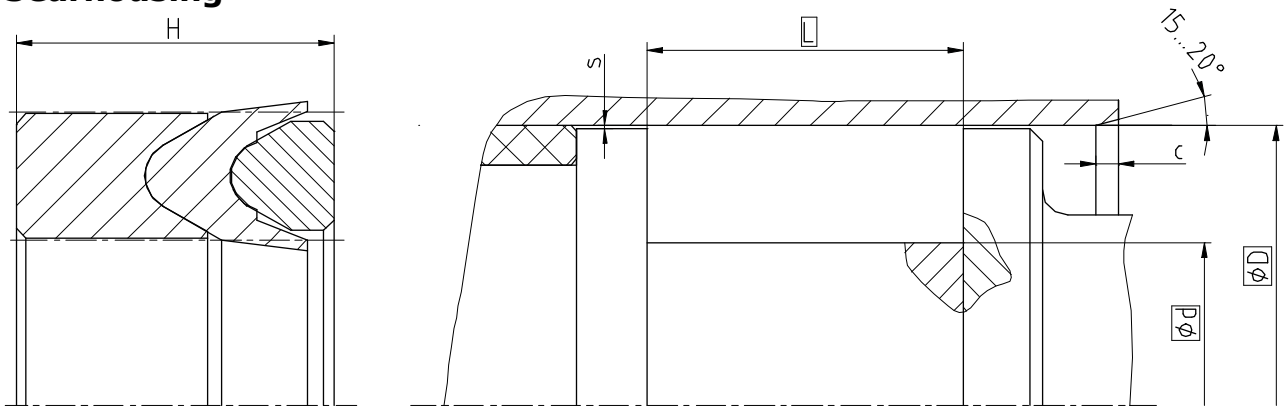

Surface roughness	Rtmax	Ra
Sliding Surface	≤ 2,5 µm	0,1...0,5 µm
Bottom of groove	≤ 6,3 µm	≤ 1,6 µm
Groove face	≤ 15 µm	≤ 3 µm

Ordering dimensions...□

Bearing area: 50...95% and a cutting depth of 0,5xRz based on Cref = 0%

Standard dimensions

ØD H9	**Ød** h10	**L** +0,2	**Rmax**	**c**	**s***
- ... < 40	D - 10	12,0	0,4	4,0	0,25
≥ 40 ... < 75	D - 15	18,2	0,4	5,0	0,37
≥ 75 ... < 150	D - 20	23,2	0,4	6,0	0,50
≥ 150 ... < 200	D - 25	28,8	0,4	8,5	0,62
≥ 200 ... < 300	D - 30	35,7	0,4	10,0	0,75
≥ 300	D - 40	43,2	0,4	13,0	1,00

* Extrusion gap applies to a temperature of 70 °C, higher temperatures require lower values.

Operating parameters

Backup ring K13-T	Chevron K14-T	Pressure ring K15-T	Temperature	max. speed	max. pressure[1]
SKF ECOTAL SKF ECOMID[2]	**ECOPUR®**	**X-ECOPUR™** XH-ECOPUR™ XS-ECOPUR™ G-ECOPUR 54D™	**-30 °C...+110 °C**	**0,5 m/s**	**600 bar (60 MPa)**
	H-ECOPUR™		-20 °C...+110 °C		
	S-ECOPUR™		-30 °C...+110 °C	0,7 m/s	
	T-ECOPUR™		-40 °C...+110 °C	0,5 m/s	
	G-ECOPUR™		-30 °C...+110 °C		

The stated operation conditions represent general indications. It is recommended not to use all maximum values simultaneously. Surface speed limits apply only to the presence of adequate lubrication film.

[1] Pressure ratings depend on the size of the extrusion gap.

[2] ≤ Ø260mm: SKF ECOTAL ; > Ø260mm: SKF ECOMID

Ordering example

K1315-T, D=100mm, d=80mm, L=23,8mm, SKF ECOTAL / ECOPUR® / X-ECOPUR™

Piston Seal K1315-T	**100 x 80 x 23,8**	**SKF ECOTAL / ECOPUR® / X-ECOPUR™**
Profile	D x d x L	Backup ring / Chevron / Pressure ring

Seal data sheet

Piston seals

K16-A

Seal housing

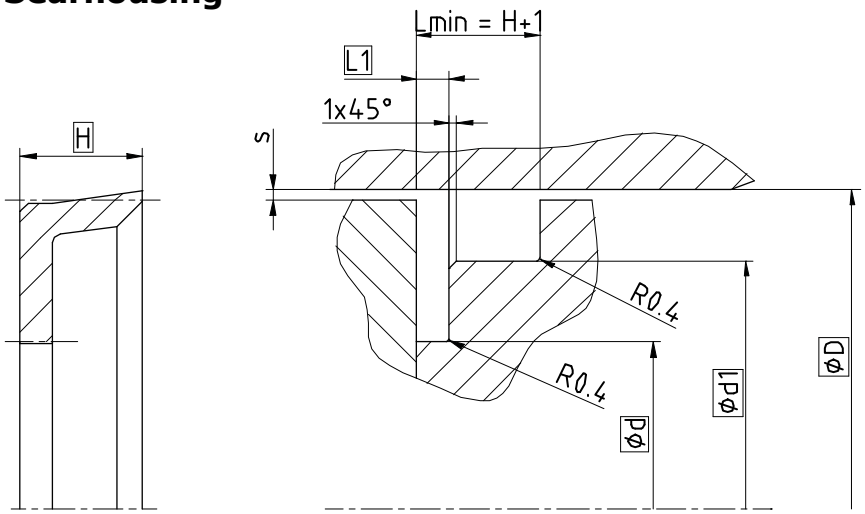

Surface roughness	Rtmax	Ra
Sliding Surface	≤ 2,5 µm	0,1...0,5 µm
Bottom of groove	≤ 6,3 µm	≤ 1,6 µm
Groove face	≤ 15 µm	≤ 3 µm

Ordering dimensions...□

Bearing area: 50...95% and a cutting depth of 0,5xRz based on Cref = 0%

Standard dimensions

This is not a standard profile and serves as a replacement for an existing housing. New constructions should use standard profiles.

Operating parameters

Sealing material	Temperature	max. speed		max. pressure	
		linear	rotary	linear[1]	rotary
ECOPUR®	**-30 °C...+110 °C**	**0,5 m/s**	**2 m/s**	**160 bar (16 MPa)**	**7 bar (0,7 MPa)**
H-ECOPUR™	-20 °C...+110 °C				
S-ECOPUR™	-20 °C...+110 °C	0,7 m/s			
T-ECOPUR™	-50 °C...+110 °C	0,5 m/s			
G-ECOPUR™	-30 °C...+110 °C				
SKF ECORUBBER-1	-30 °C...+100 °C	0,5 m/s	5 m/s	160 bar (16 MPa)	5 bar (0,5 MPa)
SKF ECORUBBER-2	-20 °C...+200 °C				
SKF ECORUBBER-3	-50 °C...+150 °C				
SKF ECORUBBER-H	-25 °C...+150 °C				
SKF ECOFLAS	-10 °C...+200 °C				

The stated operation conditions represent general indications. It is recommended not to use all maximum values simultaneously. Surface speed limits apply only to the presence of adequate lubrication film.

[1] Pressure ratings depend on the size of the extrusion gap.

Ordering example

K16-A, D=58mm, d=50mm, d1=53mm, L1=3mm, H=12mm, ECOPUR®

Piston Seal K16-A	**58 x 50/53 x 3/12**	**ECOPUR®**
Profile	D x d/d1 x L1/H	Sealing material

Seal data sheet

Piston seals

K16-B

Seal housing

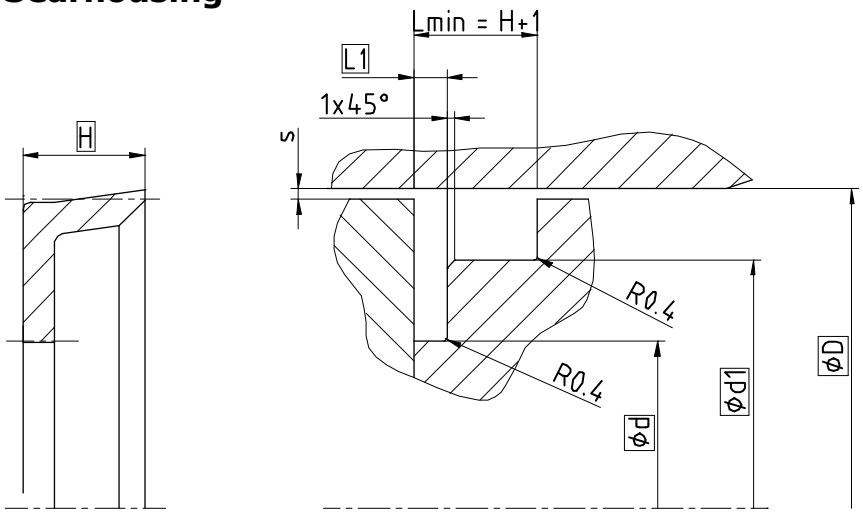

Surface roughness	Rtmax	Ra
Sliding Surface	≤ 2,5 µm	0,1...0,5 µm
Bottom of groove	≤ 6,3 µm	≤ 1,6 µm
Groove face	≤ 15 µm	≤ 3 µm

Ordering dimensions...☐

Bearing area: 50...95% and a cutting depth of 0,5xRz based on Cref = 0%

Standard dimensions

This is not a standard profile and serves as a replacement for an existing housing. New constructions should use standard profiles.

Operating parameters

Sealing material	Temperature	max. speed		max. pressure	
		linear	rotary	linear[1]	rotary
ECOPUR®	**-30 °C...+110 °C**	**0,5 m/s**	**2 m/s**	**160 bar (16 MPa)**	**7 bar (0,7 MPa)**
H-ECOPUR™	-20 °C...+110 °C				
S-ECOPUR™	-20 °C...+110 °C	0,7 m/s			
T-ECOPUR™	-50 °C...+110 °C	0,5 m/s			
G-ECOPUR™	-30 °C...+110 °C				
SKF ECORUBBER-1	-30 °C...+100 °C	0,5 m/s	5 m/s	160 bar (16 MPa)	5 bar (0,5 MPa)
SKF ECORUBBER-2	-25 °C...+150 °C				
SKF ECORUBBER-3	-20 °C...+200 °C				
SKF ECORUBBER-H	-50 °C...+150 °C				
SKF ECOFLAS	-10 °C...+200 °C				

The stated operation conditions represent general indications. It is recommended not to use all maximum values simultaneously. Surface speed limits apply only to the presence of adequate lubrication film.

[1] Pressure ratings depend on the size of the extrusion gap.

Ordering example

K16-B, D=58mm, d=50mm, d1=53mm, L1=3mm, H=12mm, ECOPUR®

Piston Seal K16-B	**58 x 50/53 x 3/12**	**ECOPUR®**
Profile	D x d/d1 x L1/H	Sealing material

Seal data sheet

Piston seals

K17-P

Seal housing

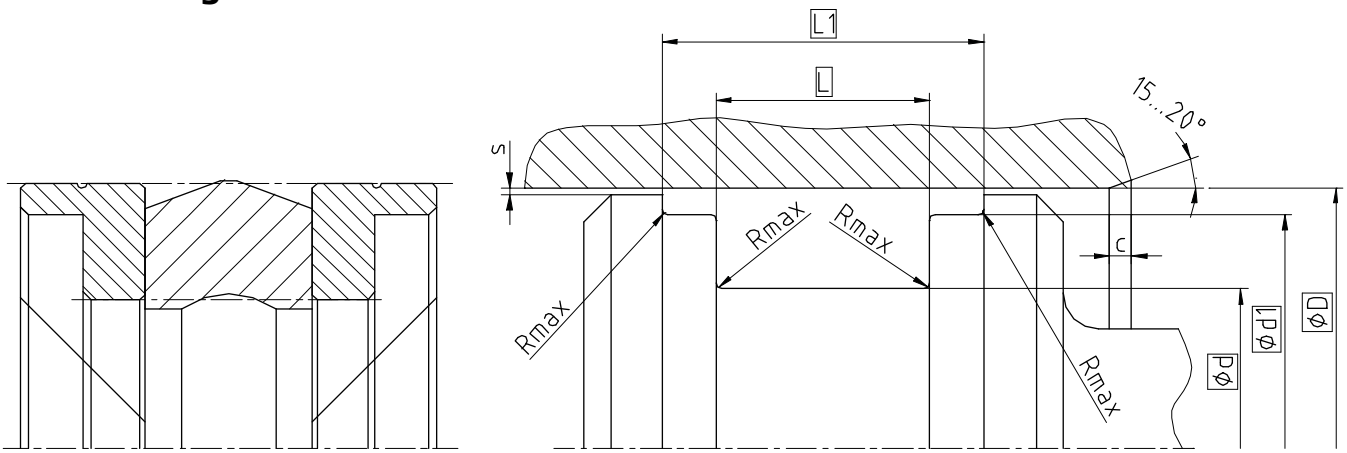

Surface roughness	Rtmax	Ra
Sliding Surface	≤ 2,5 µm	0,1...0,5 µm
Bottom of groove	≤ 6,3 µm	≤ 1,6 µm
Groove face	≤ 15 µm	≤ 3 µm

Ordering dimensions...□

Bearing area: 50...95% and a cutting depth of 0,5xRz based on Cref = 0%

Standard dimensions

ØD H9	**Ød** h9	**Ød1** h8	**L** +0,2	**L1**	**Rmax**	**c**	**s***
≥ 13 ... < 40	D - 8	D - 3	10	18	0,4	4	0,35
≥ 40 ... < 80	D - 10	D - 3	10	18	0,4	4	0,40
≥ 80 ... < 120	D - 15	D - 4	15	23	0,4	5	0,50
≥ 120 ... < 200	D - 20	D - 5	20	33	0,4	6	0,65
≥ 200 ... < 400	D - 25	D - 6	25	39	0,4	8,5	0,75
≥ 400 ... < 600	D - 30	D - 8	30	44	0,4	10	1,00

* Extrusion gap applies to a temperature of 70 °C, higher temperatures require lower values.

Operating parameters

Sealing material	Backup ring	Temperature	max. speed	max. pressure[1]
ECOPUR®	**SKF ECOTAL** SKF ECOMID[2]	**-30 °C...+100 °C**	**0,5 m/s**	**250 bar (25 MPa)**
H-ECOPUR™		-20 °C...+100 °C		
S-ECOPUR™			0,7 m/s	
T-ECOPUR™		-40 °C...+100 °C	0,5 m/s	

The stated operation conditions represent general indications. It is recommended not to use all maximum values simultaneously. Surface speed limits apply only to the presence of adequate lubrication film.

[1] Pressure ratings depend on the size of the extrusion gap.

[2] ≤ Ø260mm: SKF ECOTAL ; > Ø260mm: SKF ECOMID

Ordering example

K17-P, D=100mm, d=85mm, d1=96, L=15mm, L1=23mm, ECOPUR® / SKF ECOTAL

Piston Seal K09-D	**100 x 85/96 x 15/23**	**ECOPUR® / SKF ECOTAL**
Profile	D x d/d1 x L/L1	Sealing material / Backup ring

Seal data sheet

Piston seals

K17-R

Seal housing

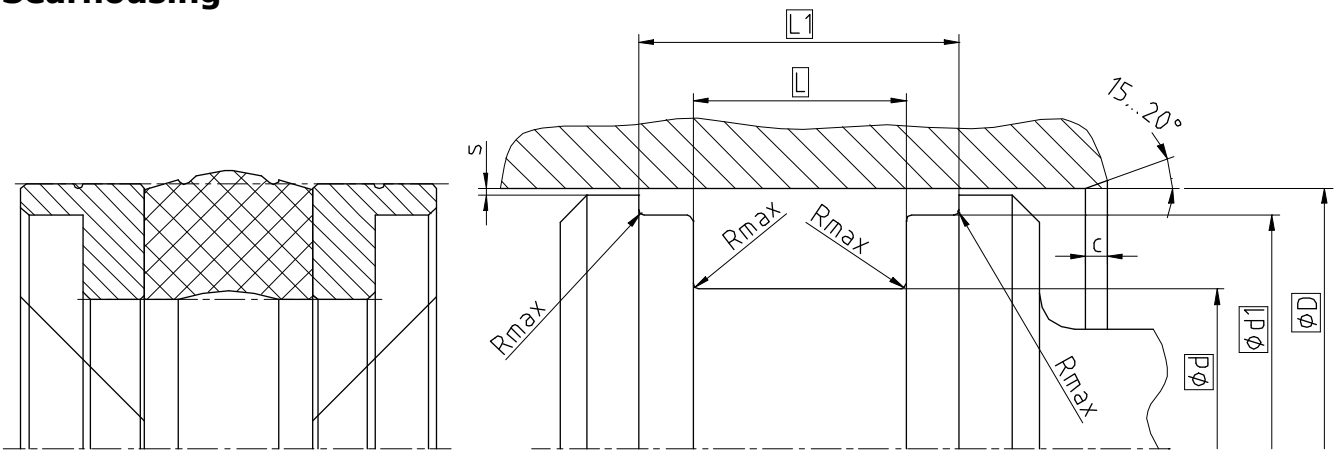

Surface roughness	Rtmax	Ra
Sliding Surface	≤ 2,5 µm	0,1...0,5 µm
Bottom of groove	≤ 6,3 µm	≤ 1,6 µm
Groove face	≤ 15 µm	≤ 3 µm

Ordering dimensions...☐

Bearing area: 50...95% and a cutting depth of 0,5xRz based on Cref = 0%

Standard dimensions

ØD H9	**Ød** h9	**Ød1** h8	**L** +0,2	**L1**	**Rmax**	**c**	**s***
≥ 13 ... < 40	D - 8	D - 3	10	18	0,4	4	0,39
≥ 40 ... < 80	D - 10	D - 3	10	18	0,4	4	0,39
≥ 80 ... < 120	D - 15	D - 4	15	23	0,4	5	0,52
≥ 120 ... < 200	D - 20	D - 5	20	33	0,4	6	0,65
≥ 200 ... < 400	D - 25	D - 6	25	39	0,4	8,5	0,78
≥ 400 ... < 600	D - 30	D - 8	30	44	0,4	10	1,00

* Extrusion gap applies to a temperature of 70 °C, higher temperatures require lower values.

Operating parameters

Sealing material	Backup ring	Temperature	max. speed	max. pressure[1]
SKF ECORUBBER-1	**SKF ECOTAL**	**-30 °C...+100 °C**	**0,5 m/s**	**250 bar (25 MPa)**
SKF ECORUBBER-H	SKF ECOMID[2]	-25 °C...+100 °C		
SKF ECORUBBER-2	SKF ECOPAEK	-20 °C...+200 °C		
SKF ECORUBBER-H	SKF ECOFLON 2	-25 °C...+150 °C		

The stated operation conditions represent general indications. It is recommended not to use all maximum values simultaneously. Surface speed limits apply only to the presence of adequate lubrication film.

[1] Pressure ratings depend on the size of the extrusion gap.

[2] ≤ Ø260mm: SKF ECOTAL ; > Ø260mm: SKF ECOMID

Ordering example

K17-R, D=100mm, d=85mm, d1=96, L=15mm, L1=23mm, SKF ECORUBBER-1 / SKF ECOTAL

Piston Seal K17-R	**100 x 85/96 x 15/23**	**SKF ECORUBBER-1 / SKF ECOTAL**
Profile	D x d/d1 x L/L1	Sealing material / Backup ring

Seal data sheet

Piston seals

K19-F

Seal housing

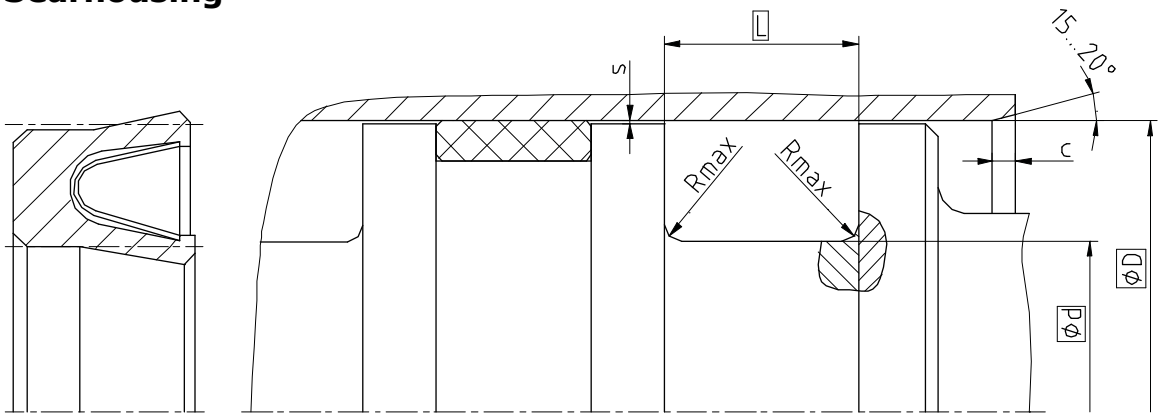

Surface roughness	Rtmax	Ra
Sliding Surface	≤ 2 µm	0,05...0,3 µm
Bottom of groove	≤ 6,3 µm	≤ 1,6 µm
Groove face	≤ 15 µm	≤ 3 µm

Ordering dimensions...☐

Bearing area: 50...95% and a cutting depth of 0,5xRz based on Cref = 0%

Standard dimensions

ØD H9	**Ød** h10	**L** +0,2	**Rmax**	**c**	**max. radial extrusion gap s***				
					20 bar	100 bar	200 bar	300 bar	400 bar
≥ 10 ... < 18	D - 4,5	3,6	0,3	1,13	0,25	0,12	0,10	0,08	0,07
≥ 18 ... < 50	D - 6,2	4,8	0,3	1,55	0,35	0,17	0,12	0,1	0,08
≥ 50 ... < 120	D - 9,4	7,1	0,3	2,35	0,45	0,22	0,17	0,12	0,1
≥ 120 ... < 630	D - 12,2	9,5	0,3	3,05	0,6	0,31	0,25	0,15	0,12
≥ 630 ... < 1600	D - 19	15	0,3	4,75	0,87	0,48	0,38	0,28	0,2

* Extrusion gap applies to a temperature of 80 °C, higher temperatures require lower values.

Operating parameters

Sealing material	Spring	Temperature	max. speed	max. pressure[1]
SKF ECOFLON 1	**1.4310**	**-200 °C...+260 °C**	**15 m/s**	200 bar (20 MPa)
SKF ECOFLON 2 **SKF ECOFLON 3** SKF ECOFLON 4				**400 bar (40 MPa)**
SKF ECOWEAR 1000		-200 °C...+80 °C		200 bar (20 MPa)

The stated operation conditions represent general indications. It is recommended not to use all maximum values simultaneously. Surface speed limits apply only to the presence of adequate lubrication film.

[1] Pressure ratings depend on the size of the extrusion gap.

Ordering example

K19-F, D=100mm, d=90,6mm, L=7,1mm, SKF ECOFLON 3 / 1.4310

Piston Seal K19-F	**100 x 90,6 x 7,1**	**SKF ECOFLON 3 / 1.4310**
Profile	D x d x L	Sealing material / Spring

Seal data sheet

Piston seals

K20-R

Seal housing

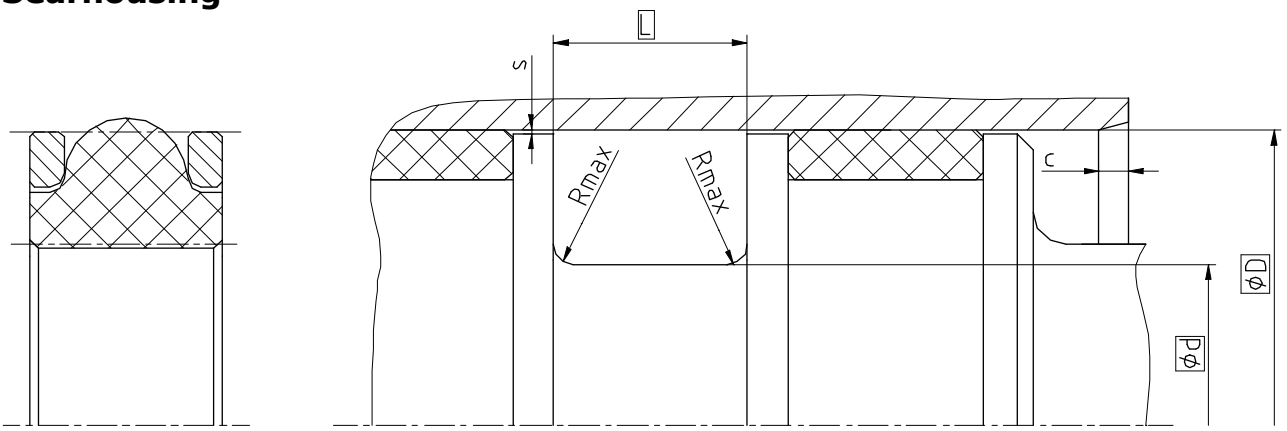

Surface roughness	Rtmax	Ra
Sliding Surface	≤ 2,5 µm	0,1...0,5 µm
Bottom of groove	≤ 6,3 µm	≤ 1,6 µm
Groove face	≤ 15 µm	≤ 3 µm

Ordering dimensions...☐

Bearing area: 50...95% and a cutting depth of 0,5xRz based on Cref = 0%

Standard dimensions

ØD H9		**Ød** h9	**L** +0,25	**Rmax**[1]	**c**	**s***
static	dynamic					
≥ 8 ... < 100	-	D - 2,70	4,5	0,2 0,4	2	H9/f8
≥ 100 ... < 150	≥ 8 ... < 20	D - 4,36	6,5		2	
≥ 150 ... < 250	≥ 20 ... < 40	D - 6,00	7,4		3	
≥ 250 ... < 400	≥ 40 ... < 100	D - 9,06	10,1		3,5	
≥ 400 ... < 600	≥ 100 ... < 300	D - 11,88	12,8		4,5	
≥ 600 ...	≥ 300 ... ≤ 600	D - 17,00	17,5		5	

* Extrusion gap applies to a temperature of 70 °C, higher temperatures require lower values.
[1] Ød ≤ 40mm: 0,2 ; > 40mm: 0,4

Operating parameters

Sealing material	Backup ring	Temperature	max. speed	max. pressure[1]
SKF ECORUBBER-1	**SKF ECOTAL**	**-30 °C...+100 °C**	**0,5 m/s**	**700 bar (70 Mpa)**
SKF ECORUBBER-H	SKF ECOMID[2]	-25 °C...+100 °C		
SKF ECORUBBER-2	SKF ECOPAEK	-20 °C...+200 °C		
SKF ECORUBBER-H	SKF ECOFLON 2	-25 °C...+150 °C		

The stated operation conditions represent general indications. It is recommended not to use all maximum values simultaneously. Surface speed limits apply only to the presence of adequate lubrication film.
[1] Pressure ratings depend on the size of the extrusion gap.
[2] ≤ Ø260mm: SKF ECOTAL ; > Ø260mm: SKF ECOMID

Ordering example

K20-R, D=100mm, d=95,64mm, L=6,5mm, SKF ECORUBBER-1 / SKF ECOTAL

Piston Seal K20-R	**100 x 95,64 x 6,5**	**SKF ECORUBBER-1 / SKF ECOTAL**
Profile	D x d x L	Sealing material / Backup ring

Seal data sheet

Piston seals

K21-P

Seal housing

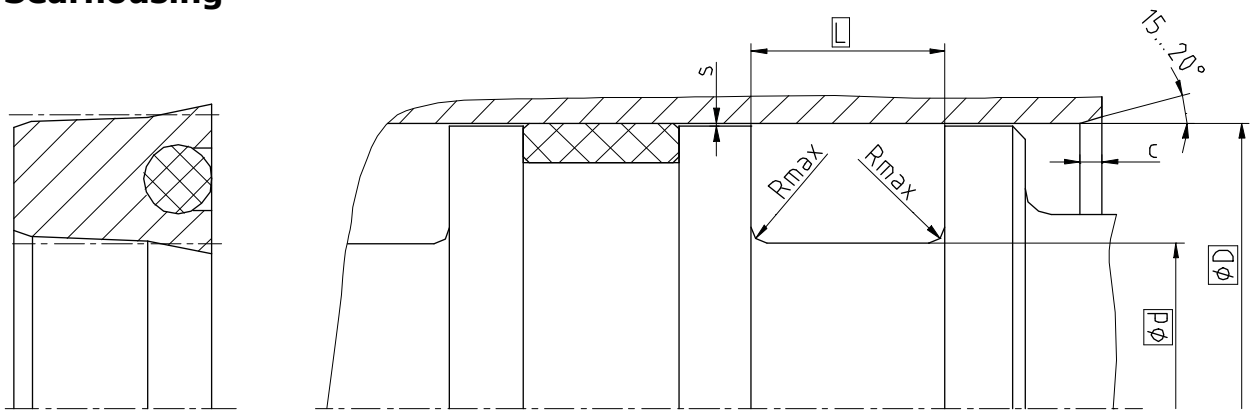

Surface roughness	Rtmax	Ra
Sliding Surface	≤ 2,5 µm	0,1...0,5 µm
Bottom of groove	≤ 6,3 µm	≤ 1,6 µm
Groove face	≤ 15 µm	≤ 3 µm

Ordering dimensions...☐

Bearing area: 50...95% and a cutting depth of 0,5xRz based on Cref = 0%

Standard dimensions

ØD H9	**Ød** h10	**L** +0,2	**Rmax**	**c**	**max. radial extrusion gap s***			
					20 bar	100 bar	200 bar	400 bar
≥ 13 ... ≤ 25	D - 8	6,0	0,4	3,5	0,33	0,18	0,11	0,05
> 25 ... ≤ 50	D - 10	7,0	0,4	4,0	0,37	0,22	0,16	0,10
> 50 ... ≤ 75	D - 12	8,0	0,4	4,5	0,42	0,27	0,20	0,14
> 75 ... ≤ 150	D - 15	10,0	0,4	5,0	0,46	0,31	0,25	0,19
> 150 ... ≤ 300	D - 20	12,0	0,4	6,0	0,54	0,39	0,32	0,26
> 300 ... ≤ 500	D - 25	18,0	0,4	8,5	0,61	0,46	0,39	0,33
> 500 ... ≤ 600	D - 30	20,0	0,4	10,0	0,67	0,52	0,45	0,39

* Extrusion gap applies to a temperature of 70 °C, higher temperatures require lower values.

Operating parameters

Sealing material	Energizer	Temperature	max. speed	max. pressure[1]
ECOPUR®	**NBR 70**	**-30 °C...+100 °C**	**0,5 m/s**	**400 bar (40 Mpa)**
H-ECOPUR™		-20 °C...+100 °C	0,5 m/s	
S-ECOPUR™			0,7 m/s	
T-ECOPUR™	MVQ70	-50 °C...+110 °C	0,5 m/s	

The stated operation conditions represent general indications. It is recommended not to use all maximum values simultaneously. Surface speed limits apply only to the presence of adequate lubrication film.

[1] Pressure ratings depend on the size of the extrusion gap.

Ordering example

K21-P, D=100mm, d=85mm, L=10mm, ECOPUR® / NBR70

Piston Seal K21-P	**100 x 85 x 10**	**ECOPUR® / NBR 70**
Profile	D x d x L	Sealing material / Energizer

Seal data sheet

Piston seals

K22-P

Seal housing

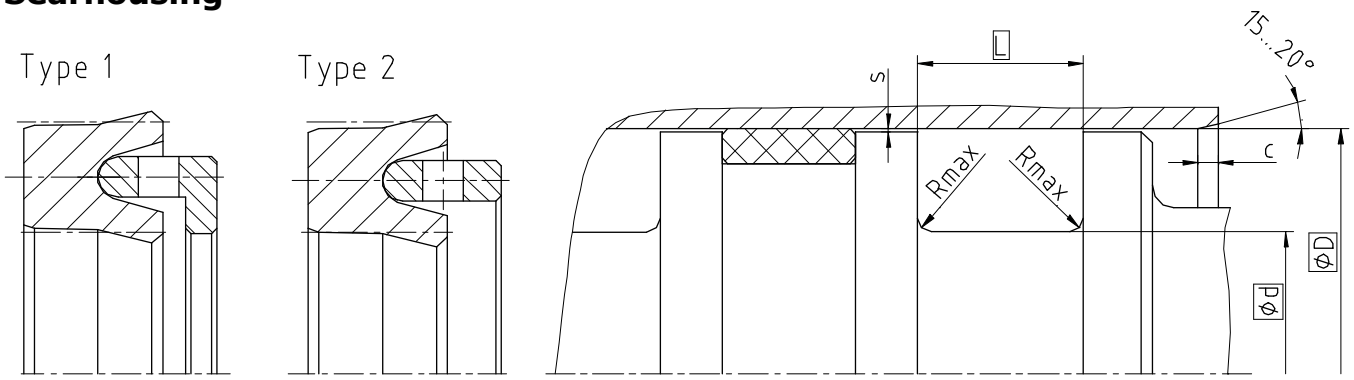

Surface roughness	Rtmax	Ra
Sliding Surface	≤ 2,5 µm	0,1...0,5 µm
Bottom of groove	≤ 6,3 µm	≤ 1,6 µm
Groove face	≤ 15 µm	≤ 3 µm

Ordering dimensions...☐

Bearing area: 50...95% and a cutting depth of 0,5xRz based on Cref = 0%

Standard dimensions

ØD H9	**Ød** h10	**L** +0,2	**Rmax**	**c**	**max. radial extrusion gap s***			
					20 bar	100 bar	200 bar	400 bar
≥ 14 ... ≤ 25	D - 8	6,0	0,4	3,5	0,33	0,18	0,11	0,05
> 25 ... ≤ 50	D - 10	7,0	0,4	4,0	0,37	0,22	0,16	0,10
> 50 ... ≤ 75	D - 12	8,0	0,4	4,5	0,42	0,27	0,20	0,14
> 75 ... ≤ 150	D - 15	10,0	0,4	5,0	0,46	0,31	0,25	0,19
> 150 ... ≤ 300	D - 20	12,0	0,4	6,0	0,54	0,39	0,32	0,26
> 300 ... ≤ 500	D - 25	18,0	0,4	8,5	0,61	0,46	0,39	0,33
> 500 ... ≤ 600	D - 30	20,0	0,4	10,0	0,67	0,52	0,45	0,39

* Extrusion gap applies to a temperature of 70 °C, higher temperatures require lower values.
Standard: Type 2

Operating parameters

Sealing material	Support ring	Temperature	max. speed	max. pressure[1]
ECOPUR®	**SKF ECOTAL** SKF ECOMID[2]	**-30 °C...+100 °C**	0,5 m/s	**400 bar (40 Mpa)**
H-ECOPUR™		-20 °C...+100 °C		
S-ECOPUR™		-20 °C...+100 °C	0,7 m/s	
T-ECOPUR™		-40 °C...+100 °C	0,5 m/s	
G-ECOPUR™		-30 °C...+100 °C		

The stated operation conditions represent general indications. It is recommended not to use all maximum values simultaneously. Surface speed limits apply only to the presence of adequate lubrication film.
[1] Pressure ratings depend on the size of the extrusion gap.
[2] ≤ Ø260mm: SKF ECOTAL ; > Ø260mm: SKF ECOMID

Ordering example

K22-P, D=100mm, d=85mm, L=10mm, ECOPUR® / SKF ECOTAL

Piston Seal K22-P	**100 x 85 x 10**	**ECOPUR® / SKF ECOTAL**
Profile	D x d x L	Sealing material / Support ring

Seal data sheet

Piston seals

K22-R

Seal housing

Type 1

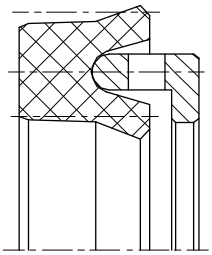

Type 2

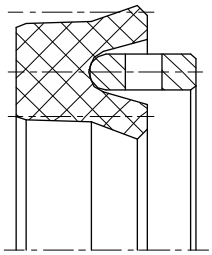

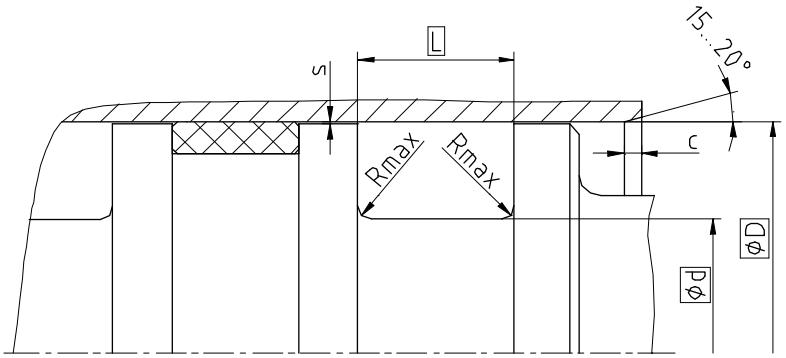

Surface roughness	Rtmax	Ra
Sliding Surface	≤ 2,5 µm	0,1...0,5 µm
Bottom of groove	≤ 6,3 µm	≤ 1,6 µm
Groove face	≤ 15 µm	≤ 3 µm

Ordering dimensions...☐

Bearing area: 50...95% and a cutting depth of 0,5xRz based on Cref = 0%

Standard dimensions

ØD H9	**Ød** h10	**L** +0,2	**Rmax**	**c**	**max. radial extrusion gap s***		
					20 bar	100 bar	160 bar
≥ 14 ... ≤ 25	D - 8	6,0	0,4	3,5	0,23	0,16	0,14
> 25 ... ≤ 50	D - 10	7,0	0,4	4,0	0,26	0,19	0,17
> 50 ... ≤ 75	D - 12	8,0	0,4	4,5	0,29	0,22	0,20
> 75 ... ≤ 150	D - 15	10,0	0,4	5,0	0,31	0,24	0,22
> 150 ... ≤ 300	D - 20	12,0	0,4	6,0	0,34	0,27	0,25
> 300 ... ≤ 500	D - 25	18,0	0,4	8,5	0,37	0,30	0,29
> 500 ... ≤ 600	D - 30	20,0	0,4	10,0	0,40	0,34	0,32

* Extrusion gap applies to a temperature of 70 °C, higher temperatures require lower values.
Standard: Type 2

Operating parameters

Sealing material	Support ring	Temperature	max. speed	max. pressure[1]
SKF ECORUBBER-1	**SKF ECOTAL** SKF ECOMID[2]	**-30 °C...+100 °C**	**0,5 m/s**	**160 bar (16 Mpa)**
SKF ECORUBBER-2	SKF ECOFLON 2	-20 °C...+100 °C		
SKF ECORUBBER-3	SKF ECOTAL SKF ECOMID[2]	-40 °C...+100 °C		
	SKF ECOFLON 2	-50 °C...+150 °C		
SKF ECORUBBER-H	SKF ECOTAL SKF ECOMID[2]	-25 °C...+100 °C		
	SKF ECOFLON 2	-25 °C...+150 °C		
SKF ECOFLAS		-10 °C...+200 °C		

The stated operation conditions represent general indications. It is recommended not to use all maximum values simultaneously. Surface speed limits apply only to the presence of adequate lubrication film.
[1] Pressure ratings depend on the size of the extrusion gap.
[2] ≤ Ø260mm: SKF ECOTAL ; > Ø260mm: SKF ECOMID

Ordering example

K22-P, D=100mm, d=85mm, L=10mm, SKF ECORUBBER-1 / SKF ECOTAL

Piston Seal K22-P	**100 x 85 x 10**	**SKF ECORUBBER-1 / SKF ECOTAL**
Profile	D x d x L	Sealing material / Support ring

Seal data sheet

Piston seals

K23-N

Seal housing

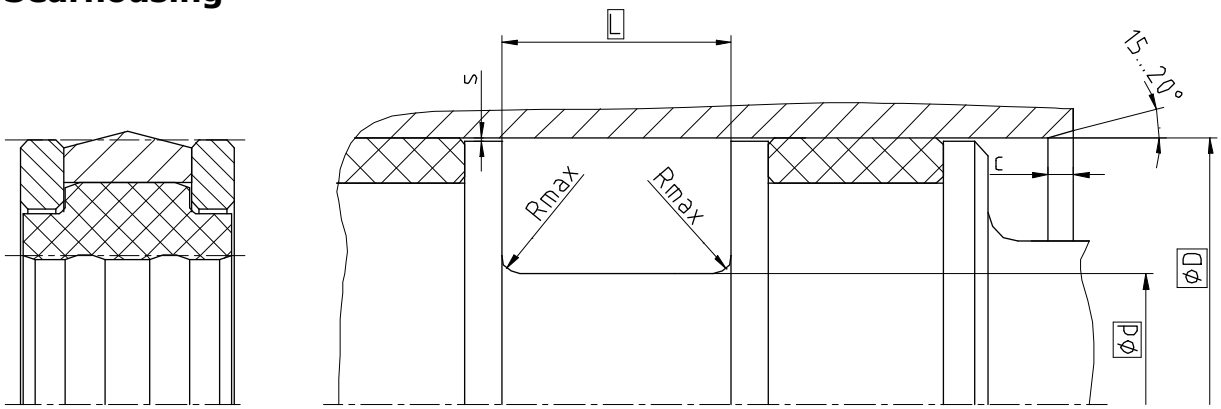

Surface roughness	Rtmax	Ra
Sliding Surface	≤ 2,5 µm	0,1...0,5 µm
Bottom of groove	≤ 6,3 µm	≤ 1,6 µm
Groove face	≤ 15 µm	≤ 3 µm

Ordering dimensions...□

Bearing area: 50...95% and a cutting depth of 0,5xRz based on Cref = 0%

Standard dimensions

ØD H9	**Ød** h9	**L** +0,2	**Rmax**	**c**	**s***
≥ 20 ... < 50	D - 10	12,5	0,4	4	0,4
≥ 50 ... < 80	D - 15	20		5	
≥ 80 ... < 150	D - 20	25		6	
≥ 150 ... < 400	D - 25	32		8,5	
≥ 400 ... ≤ 600	D - 30	36		10	

* Extrusion gap applies to a temperature of 70 °C, higher temperatures require lower values.

Operating parameters

Sealing material	Energizer	Backup ring	Temperature	max. speed	max. pressure[1]
ECOPUR®	**SKF ECORUBBER-1**	**SKF ECOTAL** SKF ECOMID[2]	**-30 °C...+100 °C**	**0,5 m/s**	**400 bar (40 Mpa)**
H-ECOPUR™			-20 °C...+100 °C		
S-ECOPUR™				0,7 m/s	
T-ECOPUR™	SKF ECOSIL		-40 °C...+100 °C	0,5 m/s	

The stated operation conditions represent general indications. It is recommended not to use all maximum values simultaneously. Surface speed limits apply only to the presence of adequate lubrication film.

[1] Pressure ratings depend on the size of the extrusion gap.

[2] ≤ Ø260mm: SKF ECOTAL ; > Ø260mm: SKF ECOMID

Ordering example

K23-N, D=100mm, d=80mm, L=25mm, ECOPUR® / SKF ECORUBBER-1 / SKF ECOTAL

Piston Seal K23-N (Profile) **100 x 80 x 25** (D x d x L) **ECOPUR® / SKF ECORUBBER-1 / SKF ECOTAL** (Sealing material / Energizer / Backup ring)

Seal data sheet

Piston seals

K23-H

Seal housing

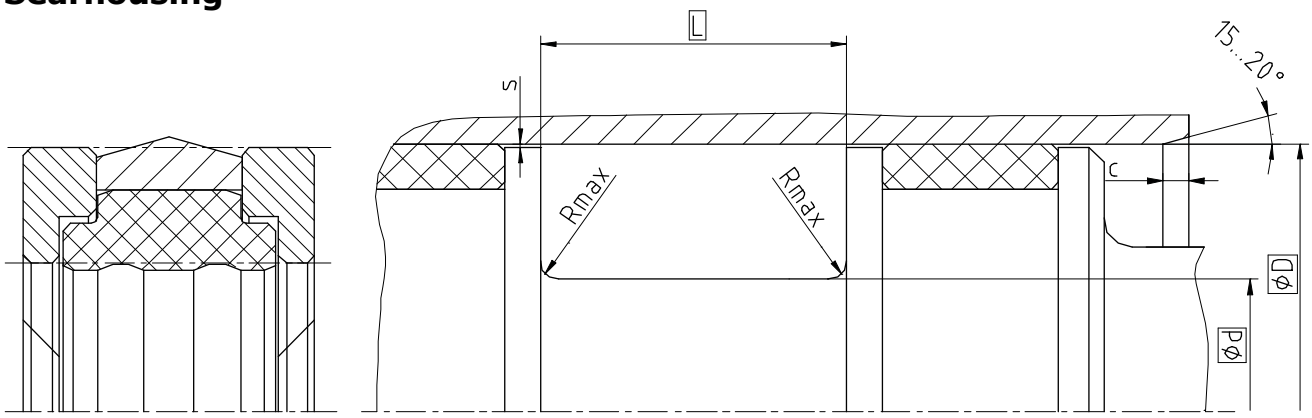

Surface roughness	Rtmax	Ra
Sliding Surface	≤ 2,5 µm	0,1...0,5 µm
Bottom of groove	≤ 6,3 µm	≤ 1,6 µm
Groove face	≤ 15 µm	≤ 3 µm

Ordering dimensions...□

Bearing area: 50...95% and a cutting depth of 0,5xRz based on Cref = 0%

Standard dimensions

ØD H9	**Ød** h9	**L** +0,2	**Rmax**	**c**	**s***
≥ 20 ... < 50	D - 10	12,5	0,4	4	0,4
≥ 50 ... < 80	D - 15	20		5	
≥ 80 ... < 150	D - 20	25		6	
≥ 150 ... < 400	D - 25	32		8,5	
≥ 400 ... < 600	D - 30	36		10	

* Extrusion gap applies to a temperature of 70 °C, higher temperatures require lower values.

Operating parameters

Sealing material	Energizer	Backup ring	Temperature	max. speed	max. pressure[1]
ECOPUR®	**SKF ECORUBBER-1**	**SKF ECOTAL** SKF ECOMID[2]	**-30 °C...+100 °C**	**0,3 m/s**	**1500 bar (150 MPa)**
H-ECOPUR™			-20 °C...+100 °C		
S-ECOPUR™				0,4 m/s	
T-ECOPUR™	SKF ECOSIL		-40 °C...+100 °C	0,3 m/s	

The stated operation conditions represent general indications. It is recommended not to use all maximum values simultaneously. Surface speed limits apply only to the presence of adequate lubrication film.

[1] Pressure ratings depend on the size of the extrusion gap.

[2] ≤ Ø260mm: SKF ECOTAL ; > Ø260mm: SKF ECOMID

Ordering example

K23-H, D=100mm, d=80mm, L=25mm, ECOPUR® / SKF ECORUBBER-1 / SKF ECOTAL

Piston Seal K23-H (Profile) **100 x 80 x 25** (D x d x L) **ECOPUR® / SKF ECORUBBER-1 / SKF ECOTAL** (Sealing material / Energizer / Backup ring)

Seal data sheet

Piston seals

K23-D

Seal housing

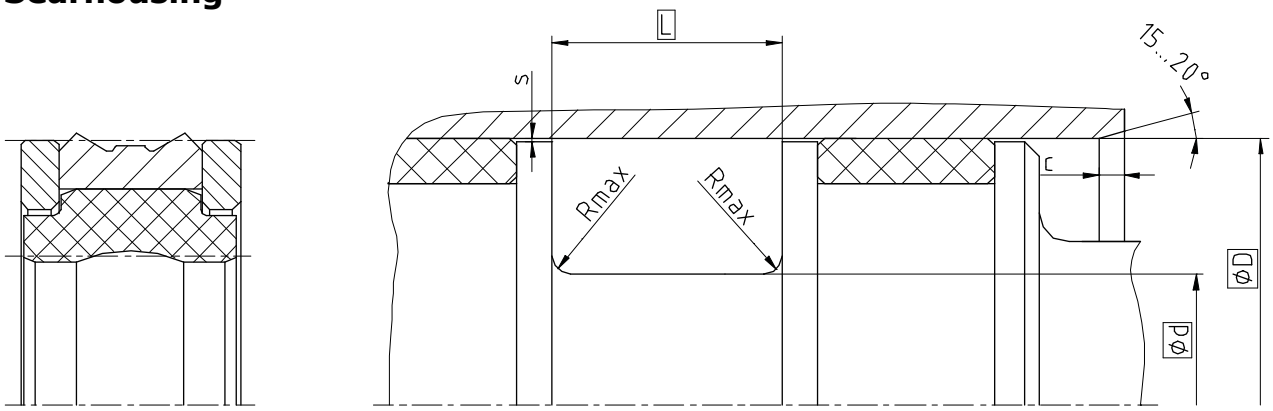

Surface roughness	Rtmax	Ra
Sliding Surface	≤ 2,5 µm	0,1...0,5 µm
Bottom of groove	≤ 6,3 µm	≤ 1,6 µm
Groove face	≤ 15 µm	≤ 3 µm

Ordering dimensions...☐

Bearing area: 50...95% and a cutting depth of 0,5xRz based on Cref = 0%

Standard dimensions

ØD H9	**Ød** h9	**L** +0,2	**Rmax**	**c**	**s***
≥ 20 ... < 50	D - 10	12,5	0,4	4	0,4
≥ 50 ... < 80	D - 15	20		5	
≥ 80 ... < 150	D - 20	25		6	
≥ 150 ... < 400	D - 25	32		8,5	
≥ 400 ... ≤ 600	D - 30	36		10	

* Extrusion gap applies to a temperature of 70 °C, higher temperatures require lower values.

Operating parameters

Sealing material	Energizer	Backup ring	Temperature	max. speed	max. pressure[1]
ECOPUR®	**SKF ECORUBBER-1**	**SKF ECOTAL** SKF ECOMID[2]	**-30 °C...+100 °C**	**0,5 m/s**	**400 bar (40 Mpa)**
H-ECOPUR™			-20 °C...+100 °C		
S-ECOPUR™				0,7 m/s	
T-ECOPUR™	SKF ECOSIL		-40 °C...+100 °C	0,5 m/s	

The stated operation conditions represent general indications. It is recommended not to use all maximum values simultaneously. Surface speed limits apply only to the presence of adequate lubrication film.

[1] Pressure ratings depend on the size of the extrusion gap.

[2] ≤ Ø260mm: SKF ECOTAL ; > Ø260mm: SKF ECOMID

Ordering example

K23-D, D=100mm, d=80mm, L=25mm, ECOPUR® / SKF ECORUBBER-1 / SKF ECOTAL

Piston Seal K23-D (Profile) **100 x 80 x 25** (D x d x L) **ECOPUR® / SKF ECORUBBER-1 / SKF ECOTAL** (Sealing material / Energizer / Backup ring)

Seal data sheet

Piston seals

K23-F

Seal housing

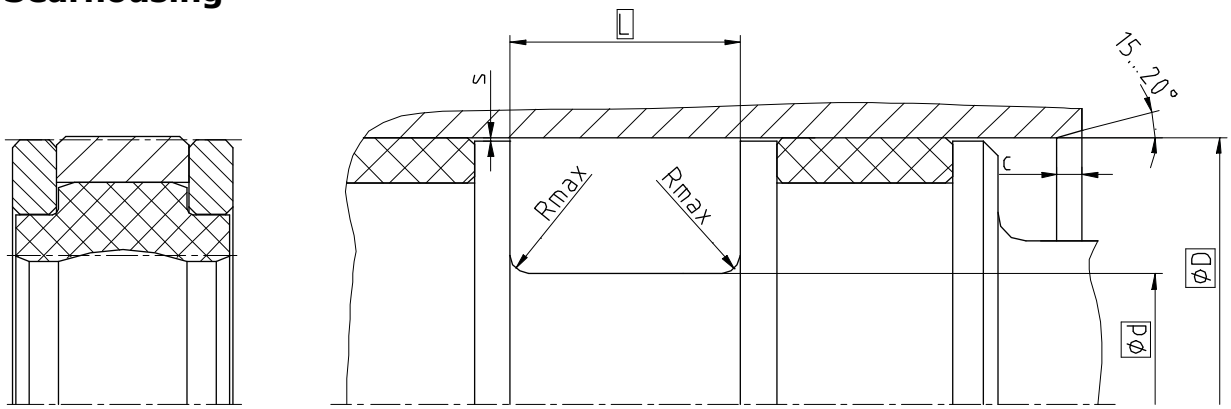

Surface roughness	Rtmax	Ra
Sliding Surface	≤ 2 µm	0,05...0,3 µm
Bottom of groove	≤ 6,3 µm	≤ 1,6 µm
Groove face	≤ 15 µm	≤ 3 µm

Ordering dimensions...□

Bearing area: 50...95% and a cutting depth of 0,5xRz based on Cref = 0%

Standard dimensions

ØD H9	**Ød** h9	**L** +0,2	**Rmax**	**c**	**s***
≥ 20 ... < 50	D - 10	12,5	0,4	4	0,4
≥ 50 ... < 80	D - 15	20		5	
≥ 80 ... < 150	D - 20	25		6	
≥ 150 ... < 400	D - 25	32		8,5	
≥ 400 ... ≤ 750	D - 30	36		10	
> 750	D - 40	40		13	

* Extrusion gap applies to a temperature of 70 °C, higher temperatures require lower values.

Operating parameters

Sealing material	Energizer	Backup ring	Temperature	max. speed	max. pressure[1]
X-ECOPUR™	SKF ECORUBBER-1	SKF ECOTAL SKF ECOMID[2]	-30 °C...+100 °C	1 m/s	400 bar (40 Mpa)
XH-ECOPUR™					
XS-ECOPUR™				1,2 m/s	
SKF ECOFLON 2 **SKF ECOFLON 3** SKF ECOFLON 4	**SKF ECORUBBER-1**	**SKF ECOTAL** SKF ECOMID[2]	**-30 °C...+100 °C**	**1,5 m/s**	**400 bar (40 Mpa)**
	SKF ECORUBBER-2	SKF ECOPAEK	-20 °C...+200 °C		

The stated operation conditions represent general indications. It is recommended not to use all maximum values simultaneously. Surface speed limits apply only to the presence of adequate lubrication film.

[1] Pressure ratings depend on the size of the extrusion gap.

[2] ≤ Ø260mm: SKF ECOTAL ; > Ø260mm: SKF ECOMID

Ordering example

K23-F, D=100mm, d=80mm, L=25mm, SKF ECOFLON 3 / SKF ECORUBBER-1 / SKF ECOTAL

Piston Seal K23-F (Profile) **100 x 80 x 25** (D x d x L) **SKF ECOFLON 3 / SKF ECORUBBER-1 / SKF ECOTAL** (Sealing material / Energizer / Backup ring)

Seal data sheet

Piston seals

K24-P

Seal housing

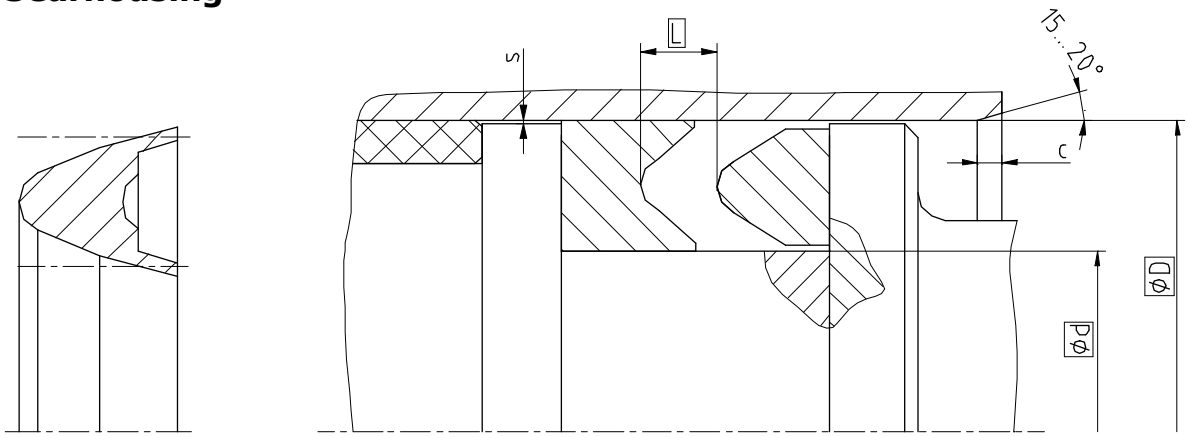

Surface roughness	Rtmax	Ra
Sliding Surface	≤ 2,5 µm	0,1...0,5 µm
Bottom of groove	≤ 6,3 µm	≤ 1,6 µm
Groove face	≤ 15 µm	≤ 3 µm

Ordering dimensions...☐

Bearing area: 50...95% and a cutting depth of 0,5xRz based on Cref = 0%

Standard dimensions

minimum nominal inside diameter Ød ≥ 22mm
This is not a standard profile and serves as a replacement for an existing installation space. New constructions should use standard profiles.

Operating parameters

Sealing material	Temperature	max. speed	max. pressure[1]
ECOPUR®	**-30 °C...+110 °C**	**0,5 m/s**	500 bar (50 Mpa)
H-ECOPUR™	-20 °C...+110 °C		
T-ECOPUR™	-50 °C...+110 °C		
S-ECOPUR™	-20 °C...+110 °C	0,7 m/s	
G-ECOPUR™	-30 °C...+110 °C	0,5 m/s	
SKF ECORUBBER-1	-30 °C...+100 °C	0,5 m/s	250 bar (25 Mpa)
SKF ECORUBBER-2	-20 °C...+200 °C		
SKF ECORUBBER-3	-50 °C...+150 °C		
SKF ECORUBBER-H	-25 °C...+150 °C		
SKF ECOFLAS	-10 °C...+200 °C		

The stated operation conditions represent general indications. It is recommended not to use all maximum values simultaneously. Surface speed limits apply only to the presence of adequate lubrication film.
[1] Pressure ratings depend on the size of the extrusion gap.

Ordering example

K24-P, D=100mm, d=80mm, L=25mm, ECOPUR®

Piston Seal K24-P	**100 x 80 x 25**	**ECOPUR®**
Profile	D x d x L	Sealing material

Seal data sheet

Piston seals

K32-P

Seal housing

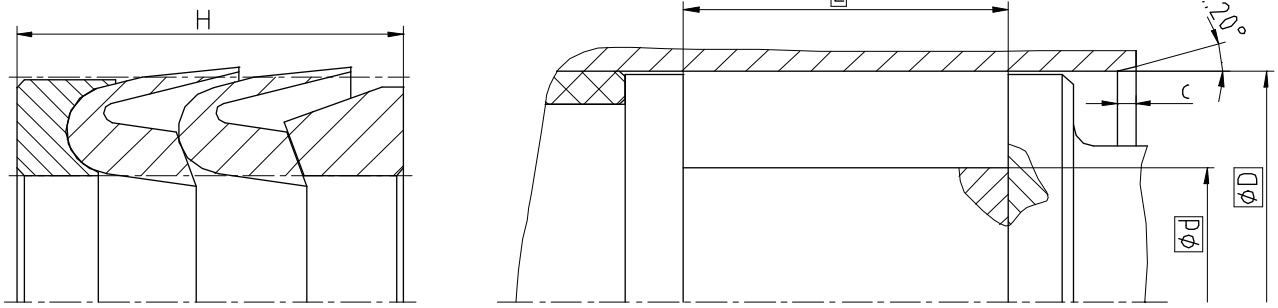

Surface roughness	Rtmax	Ra
Sliding Surface	≤ 2,5 µm	0,1...0,5 µm
Bottom of groove	≤ 6,3 µm	≤ 1,6 µm
Groove face	≤ 15 µm	≤ 3 µm

Ordering dimensions...☐

Bearing area: 50...95% and a cutting depth of 0,5xRz based on Cref = 0%

Standard dimensions

ØD H9	**Ød** h10	**L** +0,2	**Rmax**	**c**	**s***
- < 24	D - 12	24	0,4	4,5	0,6
≥ 25 ... < 44	D - 15	29		5	0,38
≥ 44 ... < 100	D - 20	38		6	0,50
≥ 100 ... < 150	D - 25	47,5		8,5	0,63
≥ 150 ... < 250	D - 30 / 35	57		10	0,75 / 0,88
> 250 ... < 500	D - 40 / 45	76		13	1,00 / 1,13
> 500	D - 50	95		16	1,25

* Extrusion gap applies to a temperature of 70 °C, higher temperatures require lower values.

Operating parameters

Pressure ring	Chevron	Backup ring	Temperature	max. speed	max. pressure[1]
SKF ECOTAL SKF ECOMID[2]	ECOPUR®	SKF ECOTAL SKF ECOMID[2]	-30 °C...+100 °C	0,5 m/s	500 bar (50 Mpa)
	H-ECOPUR™		-20 °C...+100 °C		
	S-ECOPUR™		-20 °C...+100 °C	0,7 m/s	
	T-ECOPUR™		-40 °C...+100 °C	0,5 m/s	
	G-ECOPUR™		-30 °C...+100 °C		
SKF ECOTAL SKF ECOMID[2]	**ECOPUR**	**X-ECOPUR™**	**-30 °C...+110 °C**	**0,5 m/s**	**500 bar** **(50 Mpa)**
	H-ECOPUR™	XH-ECOPUR™	-20 °C...+110 °C		
	S-ECOPUR™	XS-ECOPUR™	-20 °C...+110 °C	0,7 m/s	
	G-ECOPUR™	G-ECOPUR 54D™	-30 °C...+110 °C	0,5 m/s	

The stated operation conditions represent general indications. It is recommended not to use all maximum values simultaneously. Surface speed limits apply only to the presence of adequate lubrication film.

[1] Pressure ratings depend on the size of the extrusion gap.

[2] ≤ Ø260mm: SKF ECOTAL ; > Ø260mm: SKF ECOMID

Ordering example

K32-P, D=100mm, d=75mm, L=47,5mm, SKF ECOTAL / ECOPUR® / X-ECOPUR

Piston Seal K32-P	**100 x 75 x 47,5**	**SKF ECOTAL / ECOPUR® / X-ECOPUR**
Profile	D x d x L	Pressure ring / Chevron / Backup ring

Seal data sheet

Piston seals

K35-P

Seal housing

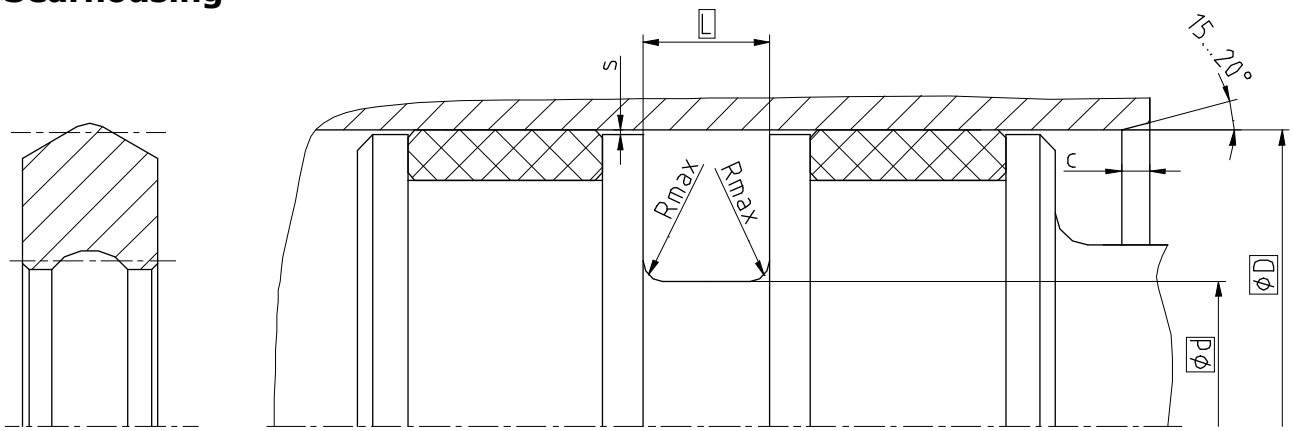

Surface roughness	Rtmax	Ra
Sliding Surface	≤ 2,5 µm	0,1...0,5 µm
Bottom of groove	≤ 6,3 µm	≤ 1,6 µm
Groove face	≤ 15 µm	≤ 3 µm

Ordering dimensions...☐

Bearing area: 50...95% and a cutting depth of 0,5xRz based on Cref = 0%

Standard dimensions

ØD H9	**Ød** h10	**L** +0,2	**Rmax**	**c**	**max. radial extrusion gap s***		
					100 bar	200 bar	400 bar
≥ 10 ... < 20	D - 5	4	0,4	2	0,16	0,08	0,03
≥ 20 ... < 40	D - 6	4,5		3	0,18	0,10	0,05
≥ 40 ... < 60	D - 8	5,5		3,5	0,18	0,10	0,05
≥ 60 ... < 100	D - 10	6,5		4	0,23	0,15	0,10
≥ 100 ... < 150	D - 15	9,5		5	0,33	0,25	0,18
≥ 150 ... < 300	D - 20	12,5		6	0,38	0,33	0,25
≥ 300 ... < 500	D - 25	15		8,5	0,45	0,40	0,33
≥ 500 ... ≤ 700	D - 30	17,5		10	0,5	0,45	0,40
> 700 ...	D - 40	22		13	0,65	0,63	0,55

* Extrusion gap applies to a temperature of 70 °C, higher temperatures require lower values.

Operating parameters

Sealing material	Temperature	max. speed[1]	max. pressure[2]
ECOPUR®	**-30 °C...+110 °C**	**0,4 m/s**	**400 bar (40 MPa)**
H-ECOPUR™	-20 °C...+110 °C	0,4 m/s	
S-ECOPUR™	-20 °C...+110 °C	0,5 m/s	
T-ECOPUR™	-50 °C...+110 °C	0,4 m/s	
G-ECOPUR™	-30 °C...+110 °C	0,4 m/s	

The stated operation conditions represent general indications. It is recommended not to use all maximum values simultaneously. Surface speed limits apply only to the presence of adequate lubrication film.

[1] Rotary applications max. 0,2 m/s

[2] Pressure ratings depend on the size of the extrusion gap.

Ordering example

K35-P, D=100mm, d=85mm, L=9,5mm, ECOPUR®

Piston Seal K35-P	**100 x 85 x 9,5**	**ECOPUR®**
Profile	D x d x L	Sealing material

TOP OSA

TIIVISTÄVÄ TEKIJÄ

Rotary Seals

Rotary Seals

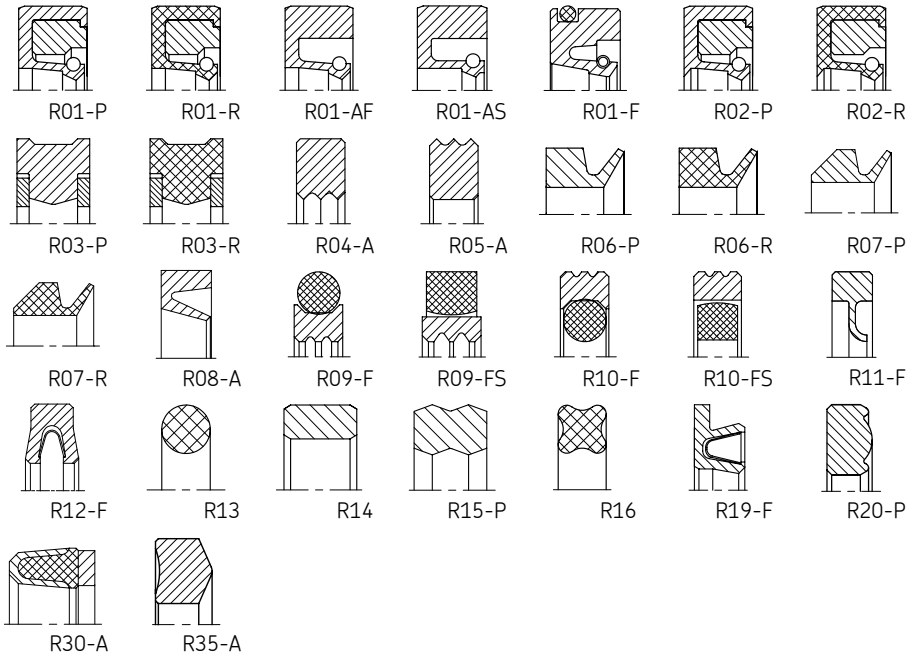

Seal data sheet
Rotary seals

R01-P

Seal housing

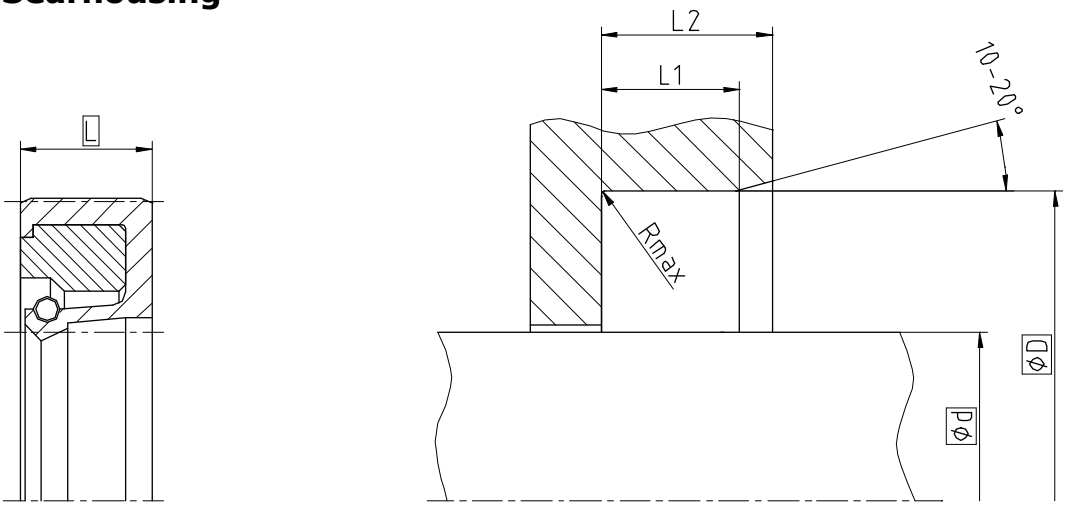

Surface roughness	Rtmax	Ra
Sliding Surface	≤ 2,5 µm	0,1...0,5 µm
Bottom of groove	≤ 6,3 µm	≤ 1,6 µm
Groove face	≤ 15 µm	≤ 3 µm

Ordering dimensions...☐
Hardness: min. 45 HRC (55 HRC recommended), Hardened depth > 0,3mm
Bearing area: 50...95% and a cutting depth of 0,5xRz based on Cref = 0%

Standard dimensions

Ød h11	**ØD** H8	**L**	**L1**	**L2**	**Rmax**
≥ 5 ... < 60	d + 12	7,0	5,95	7,3	0,4
≥ 60 ... < 140	d + 15	8,0	6,8	8,3	
≥ 140 ... < 300	d + 20	10,0	8,5	10,3	
≥ 300 ... < 500	d + 30	12,0	10,3	12,3	0,8
≥ 500 ... ≤ 800	d + 40	20,0	17	20,3	
> 800	d + 50	22,0	18,7	22,3	

Operating parameters

Sealing material	Clamping ring	Spring	Temperature	max. speed[1]	max. pressure
ECOPUR®	**SKF ECOTAL** SKF ECOMID[2]	**1.4310**	**-30 °C...+80 °C**	**5 m/s**	**0,5 bar (0,05 MPa)**
H-ECOPUR™			-20 °C...+80 °C		
S-ECOPUR™			-20 °C...+80 °C		
T-ECOPUR™			-40 °C...+80 °C		
G-ECOPUR™			-30 °C...+80 °C		

The stated operation conditions represent general indications. It is recommended not to use all maximum values simultaneously. Surface speed limits apply only to the presence of adequate lubrication film.
[1] Depending on shaft diameter
[2] ≤ Ø260mm: SKF ECOTAL ; > Ø260mm: SKF ECOMID

Ordering example

R01-P, d=100mm, D=115mm, L=8mm, ECOPUR® / SKF ECOTAL / 1.4310

Rotary Seal R01-P (Profile) **100 x 115 x 8** (d x D x L) **ECOPUR® / SKF ECOTAL / 1.4310** (Sealing material / Clamping ring / Spring)

Seal data sheet

Rotary seals

R01-R

Seal housing

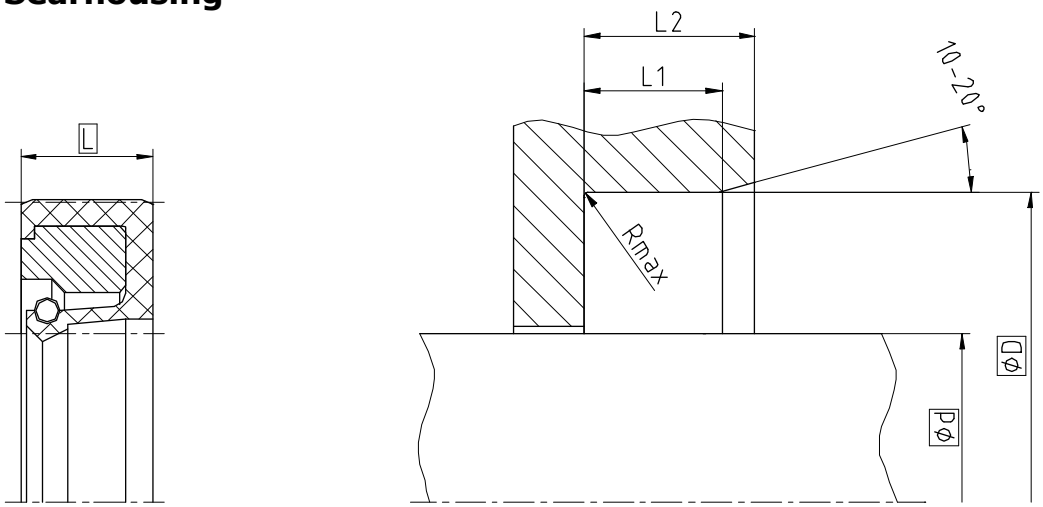

Surface roughness	Rtmax	Ra
Sliding Surface	≤ 2,5 µm	0,1...0,5 µm
Bottom of groove	≤ 6,3 µm	≤ 1,6 µm
Groove face	≤ 15 µm	≤ 3 µm

Ordering dimensions...□
Hardness: min. 45 HRC (55 HRC recommended), Hardened depth > 0,3mm
Bearing area: 50...95% and a cutting depth of 0,5xRz based on Cref = 0%

Standard dimensions

Ød h11	**ØD** H8	**L**	**L1**	**L2**	**Rmax**
≥ 5 ... < 60	d + 12	7,0	5,95	7,3	0,4
≥ 60 ... < 140	d + 15	8,0	6,8	8,3	
≥ 140 ... < 300	d + 20	10,0	8,5	10,3	
≥ 300 ... < 500	d + 30	12,0	10,3	12,3	0,8
≥ 500 ... ≤ 800	d + 40	20,0	17	20,3	
> 800	d + 50	22,0	18,7	22,3	

Operating parameters

Sealing material	Clamping ring	Spring	Temperature	max. speed[1]	max. pressure
SKF ECORUBBER-1	**SKF ECOTAL** SKF ECOMID[2]	**1.4310**	**-30 °C...+80 °C**	**10 m/s**	**0,5 bar (0,05 MPa)**
SKF ECORUBBER-2			-20 °C...+80 °C	15 m/s	
SKF ECORUBBER-3			-50 °C...+80 °C	10 m/s	
SKF ECORUBBER-H			-25 °C...+80 °C		
SKF ECOFLAS			-10 °C...+80 °C		
SKF ECOSIL			-60 °C...+80 °C	5 m/s	-
SKF ECORUBBER-1	SKF ECOPAEK		-30 °C...+100 °C	10 m/s	0,5 bar (0,05 MPa)
SKF ECORUBBER-2			-20 °C...+200 °C	15 m/s	
SKF ECORUBBER-3			-50 °C...+150 °C	10 m/s	
SKF ECORUBBER-H			-25 °C...+150 °C		
SKF ECOFLAS			-10 °C...+200 °C		
SKF ECOSIL			-60 °C...+200 °C	5 m/s	-

The stated operation conditions represent general indications. It is recommended not to use all maximum values simultaneously. Surface speed limits apply only to the presence of adequate lubrication film.
[1] Depending on shaft diameter
[2] ≤ Ø260mm: SKF ECOTAL ; > Ø260mm: SKF ECOMID

Ordering example

R01-R, d=100mm, D=115mm, L=8mm, SKF ECORUBBER-1 / SKF ECOTAL / 1.4310

Rotary Seal R01-R (Profile) **100 x 115 x 8** (d x D x L) **SKF ECORUBBER-1 / SKF ECOTAL / 1.4310** (Sealing material / Clamping ring / Spring)

Seal data sheet

Rotary seals

R01-AF

Seal housing

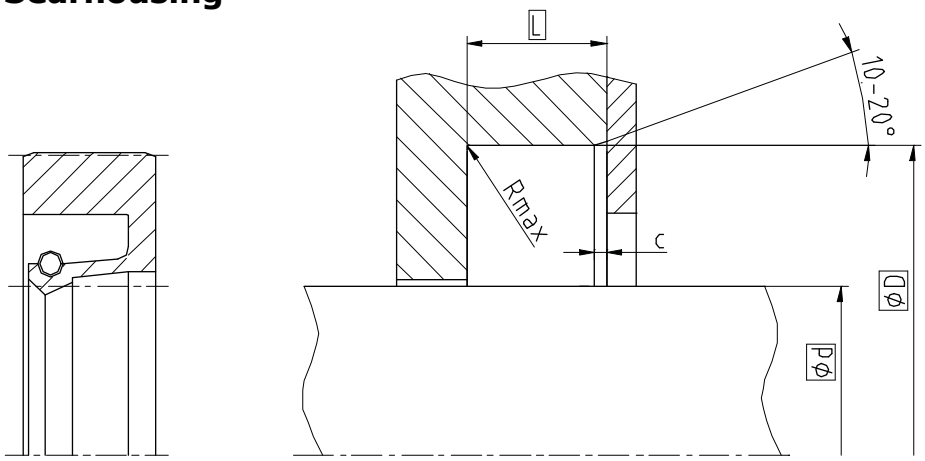

Surface roughness	Rtmax	Ra
Sliding Surface	≤ 2,5 µm	0,1...0,5 µm
Bottom of groove	≤ 6,3 µm	≤ 1,6 µm
Groove face	≤ 15 µm	≤ 3 µm

Ordering dimensions...☐
Hardness: min. 45 HRC (55 HRC recommended), Hardened depth > 0,3mm
Bearing area: 50...95% and a cutting depth of 0,5xRz based on Cref = 0%

Standard dimensions

Ød[1] h11 Rotating application	**Ød**[2] h11 Pivoting application	**ØD** H8	**L** -0,2	**c**	**Rmax**
≥ 5 ... ≤ 80	≥ 5 ... ≤ 40	d + 15	7	1,2	0,4
> 80 ... ≤ 140	> 40 ... ≤ 70	d + 20	8	1,5	
> 140 ... ≤ 240	> 70 ... ≤ 120	d + 20	10	1,5	
> 240 ... ≤ 480	> 120 ... ≤ 240	d + 30	12	1,8	0,8
> 480 ... ≤ 2240	> 240 ... ≤ 1120	d + 40	15	1,8	
> 2240 ... ≤ 3200	> 1120 ... ≤ 1600	d + 50	25	3,3	
> 3200	> 1600	d + 60	30	3,3	

Operating parameters

Sealing material	Spring	Temperature	max. speed[1]	max. pressure
ECOPUR®	**1.4310**	**-30 °C...+110 °C**	**5 m/s**	**0,5 bar (0,05 MPa)**
H-ECOPUR™		-20 °C...+110 °C		
S-ECOPUR™		-20 °C...+110 °C		
T-ECOPUR™		-50 °C...+110 °C		
G-ECOPUR™		-30 °C...+110 °C		-
SKF ECORUBBER-1	1.4310	-30 °C...+100 °C	10 m/s	0,5 bar (0,05 MPa)
SKF ECORUBBER-2		-20 °C...+200 °C	15 m/s	
SKF ECORUBBER-3		-50 °C...+150 °C	10 m/s	
SKF ECORUBBER-H		-25 °C...+150 °C		
SKF ECOFLAS		-10 °C...+200 °C		
SKF ECOSIL		-60 °C...+200 °C	5 m/s	-

The stated operation conditions represent general indications. It is recommended not to use all maximum values simultaneously. Surface speed limits apply only to the presence of adequate lubrication film.
[1] Depending on shaft diameter

Ordering example

R01-AF, d=100mm, D=120mm, L=8mm, ECOPUR® / 1.4310

Rotary Seal R01-AF	**100 x 120 x 8**	**ECOPUR® / 1.4310**
Profile	d x D x L	Sealing material / Spring

Seal data sheet

Rotary seals

R01-AS

Seal housing

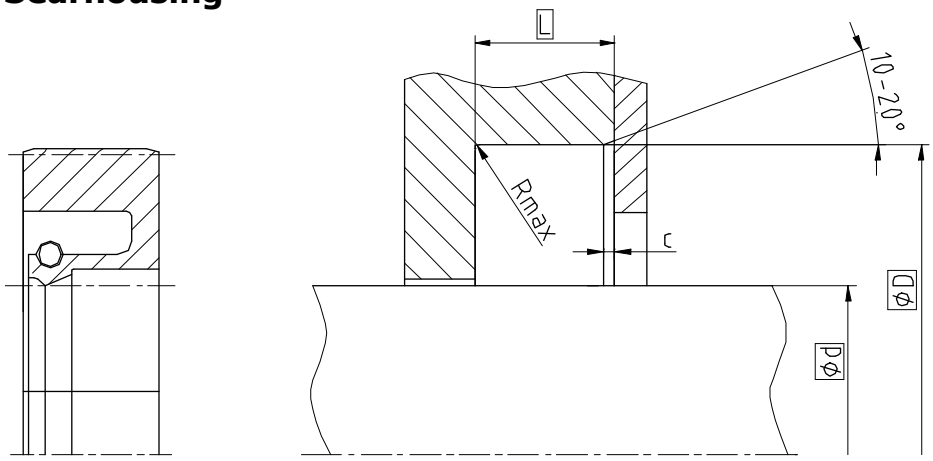

Surface roughness	Rtmax	Ra
Sliding Surface	≤ 2,5 µm	0,1...0,5 µm
Bottom of groove	≤ 6,3 µm	≤ 1,6 µm
Groove face	≤ 15 µm	≤ 3 µm

Ordering dimensions...□
Hardness: min. 45 HRC (55 HRC recommended), Hardened depth > 0,3mm
Bearing area: 50...95% and a cutting depth of 0,5xRz based on Cref = 0%

Standard dimensions

Ød[1] h11	**Ød**[2] h11	**ØD** H8	**L** -0,2	**c**	**Rmax**
Rotating application	Pivoting application				
≥ 5 ... ≤ 70	≥ 5 ... ≤ 35	d + 20	8	1,5	0,4
> 70 ... ≤ 120	> 35 ... ≤ 60	d + 20	10	1,5	
> 120 ... ≤ 240	> 60 ... ≤ 120	d + 30	12	1,8	0,8
> 240 ... ≤ 1120	> 120 ... ≤ 560	d + 40	15	3	
> 1120 ... ≤ 1600	> 560 ... ≤ 800	d + 50	20	3,3	
> 1600	> 800 ... ≤ 2220	d + 60	25	3,3	

Operating parameters

Sealing material	Spring	Temperature	max. speed[1]	max. pressure
ECOPUR®	**1.4310**	**-30 °C...+110 °C**	**5 m/s**	-
H-ECOPUR™		-20 °C...+110 °C		
S-ECOPUR™		-20 °C...+110 °C		
T-ECOPUR™		-50 °C...+110 °C		
G-ECOPUR™		-30 °C...+110 °C		
SKF ECORUBBER-1	1.4310	-30 °C...+100 °C	10 m/s	
SKF ECORUBBER-2		-20 °C...+200 °C	15 m/s	
SKF ECORUBBER-3		-50 °C...+150 °C	10 m/s	
SKF ECORUBBER-H		-25 °C...+150 °C		
SKF ECOFLAS		-10 °C...+200 °C		
SKF ECOSIL		-60 °C...+200 °C	5 m/s	

The stated operation conditions represent general indications. It is recommended not to use all maximum values simultaneously. Surface speed limits apply only to the presence of adequate lubrication film.
[1] Depending on shaft diameter

Ordering example

R01-AS, d=100mm, D=120mm, L=10mm, ECOPUR® / 1.4310

Rotary Seal R01-AS	**100 x 120 x 10**	**ECOPUR® / 1.4310**
Profile	d x D x L	Sealing material / Spring

Seal data sheet

Rotary seals

R01-F

Seal housing

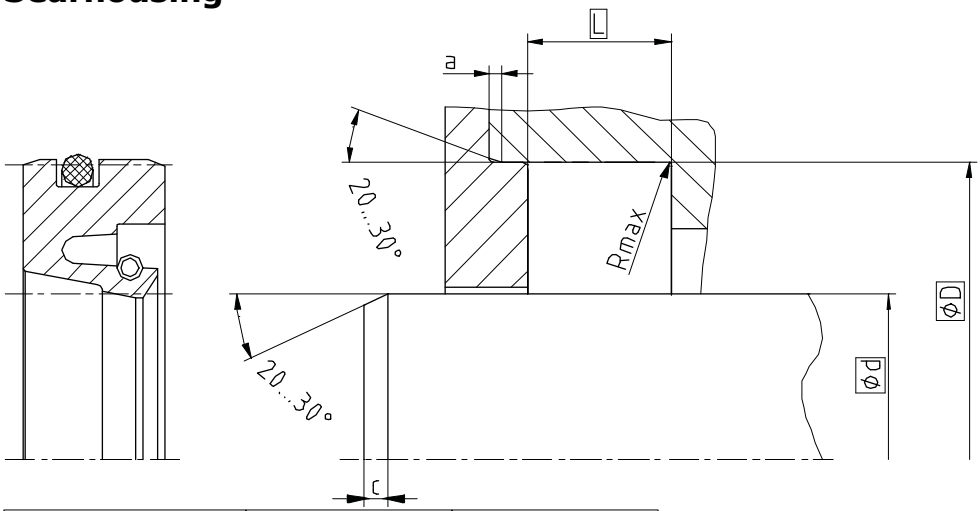

Surface roughness	Rtmax	Ra
Sliding Surface	≤ 2 µm	0,05...0,3 µm
Bottom of groove	≤ 6,3 µm	≤ 1,6 µm
Groove face	≤ 15 µm	≤ 3 µm

Ordering dimensions...☐
Hardness: On the surface min 55 HRC
Hardened depth > 0,3mm
Bearing area: 50...95% and a cutting depth of 0,5xRz based on Cref = 0%

Standard dimensions

Ød h11 Rotating applications	**Ød** h11 Pivoting applications	**ØD** H8	**L** -0,1	**c**	**a**	**Rmax**
≥ 10 ... ≤ 66	≥ 10 ... ≤ 33	d + 12	7,0	3	1,25	0,4
> 66 ... ≤ 110	> 33 ... ≤ 55	d + 15	9,0	3,5	1,5	
> 110 ... ≤ 280	> 55 ... ≤ 140	d + 20	10,0	5	2	
> 280 ... ≤ 400	> 140 ... ≤ 200	d + 25	12,5	6,5	2,5	0,8
> 400 ... ≤ 600	> 200 ... ≤ 400	d + 30	15,0	7,5	3	
-	> 400 ... ≤ 600	d + 40	20,0	9	3,5	

Operating parameters

Sealing material	Energizer	Spring	Temperature	max. speed	max. pressure
SKF ECOFLON 1 SKF ECOFLON 2 SKF ECOFLON 3 **SKF ECOFLON 4**	**NBR70**	**1.4310**	**-30 °C...+100 °C**	**10 m/s**	**15 bar (1,5 MPa)**
	FPM/FKM		-20 °C...+200 °C		

The stated operation conditions represent general indications. It is recommended not to use all maximum values simultaneously. Surface speed limits apply only to the presence of adequate lubrication film.

Ordering example

R01-F, d=100mm, D=120mm, L=10mm, SKF ECOFLON 4 / NBR70 / 1.4310

Rotary Seal R01-F	**100 x 120 x 10**	**SKF ECOFLON 4 / NBR70 / 1.4310**
Profile	d x D x L	Sealing material / O-Ring / Spring

Seal data sheet
Rotary seals

R02-P

Seal housing

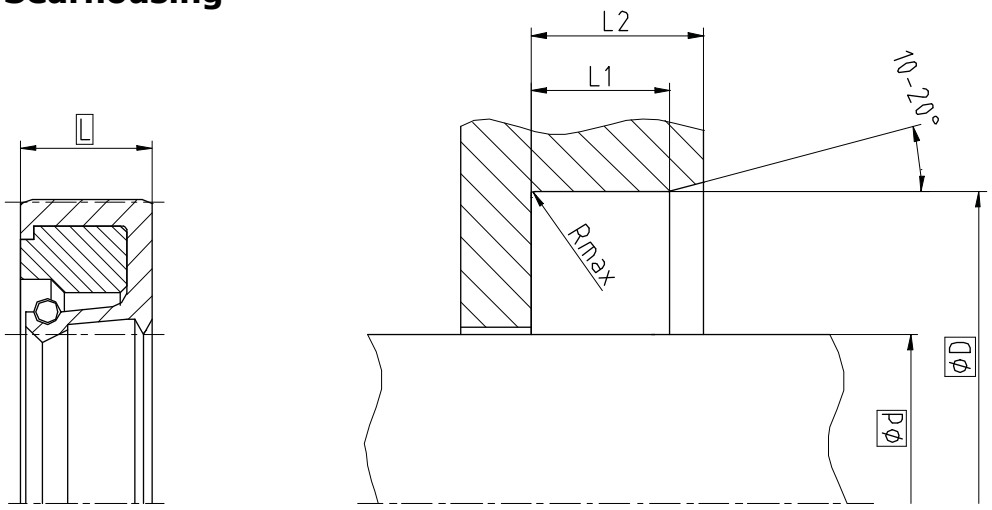

Surface roughness	Rtmax	Ra
Sliding Surface	≤ 2,5 µm	0,1...0,5 µm
Bottom of groove	≤ 6,3 µm	≤ 1,6 µm
Groove face	≤ 15 µm	≤ 3 µm

Ordering dimensions...□
Hardness: min. 45 HRC (55 HRC recommended), Hardened depth > 0,3mm
Bearing area: 50...95% and a cutting depth of 0,5xRz based on Cref = 0%

Standard dimensions

Ød h11	**ØD** H8	**L**	**L1**	**L2**	**Rmax**
≥ 5 ... < 60	d + 12	7	5,95	7,3	0,4
≥ 60 ... < 140	d + 15	8	6,8	8,3	
≥ 140 ... < 300	d + 20	10	8,5	10,3	
≥ 300 ... < 500	d + 30	12	10,3	12,3	0,8
≥ 500 ... ≤ 800	d + 40	20	17	20,3	
> 800	d + 50	22	18,7	22,3	

Operating parameters

Sealing material	Clamping ring	Spring	Temperature	max. speed[1]	max. pressure
ECOPUR®	**SKF ECOTAL** SKF ECOMID[2]	**1.4310**	**-30 °C...+80 °C**	**5 m/s**	**0,5 bar (0,05 MPa)**
H-ECOPUR™			-20 °C...+80 °C		
S-ECOPUR™					
T-ECOPUR™			-40 °C...+80 °C		
G-ECOPUR™			-30 °C...+80 °C		

The stated operation conditions represent general indications. It is recommended not to use all maximum values simultaneously. Surface speed limits apply only to the presence of adequate lubrication film.
[1] Depending on shaft diameter
[2] ≤ Ø260mm: SKF ECOTAL ; > Ø260mm: SKF ECOMID

Ordering example

R02-P, d=100mm, D=115mm, L=8mm, ECOPUR® / SKF ECOTAL / 1.4310

Rotary Seal R02-P	**100 x 115 x 8**	**ECOPUR® / SKF ECOTAL / 1.4310**
Profile	d x D x L	Sealing material / Clamping ring / Spring

Seal data sheet
Rotary seals

R02-R

Seal housing

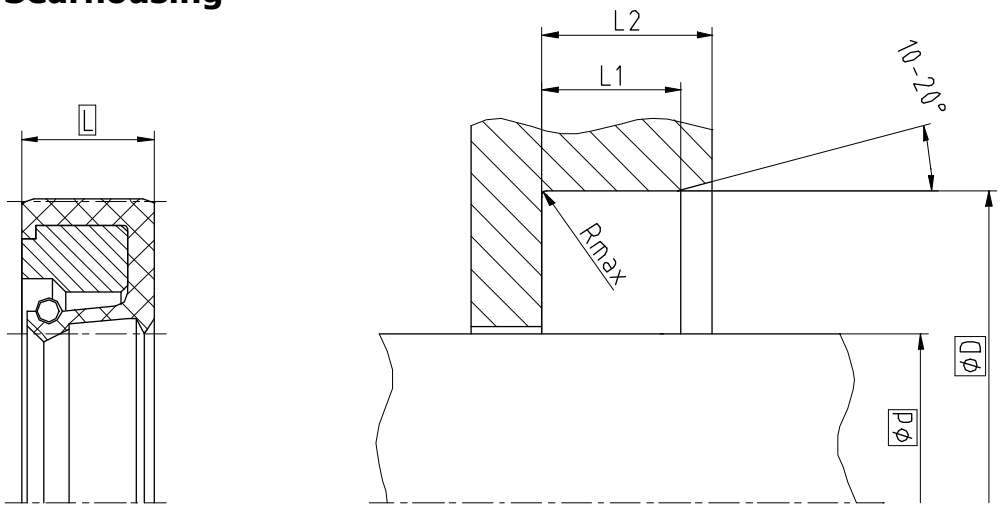

Surface roughness	Rtmax	Ra
Sliding Surface	≤ 2,5 µm	0,1...0,5 µm
Bottom of groove	≤ 6,3 µm	≤ 1,6 µm
Groove face	≤ 15 µm	≤ 3 µm

Ordering dimensions...□
Hardness: min. 45 HRC (55 HRC recommended), Hardened depth > 0,3mm
Bearing area: 50...95% and a cutting depth of 0,5xRz based on Cref = 0%

Standard dimensions

Ød h11	**ØD** H8	**L**	**L1**	**L2**	**Rmax**
≥ 5 ... < 60	d + 12	7,0	5,95	7,3	0,4
≥ 60 ... < 140	d + 15	8,0	6,8	8,3	
≥ 140 ... < 300	d + 20	10,0	8,5	10,3	
≥ 300 ... < 500	d + 30	12,0	10,3	12,3	0,8
≥ 500 ... ≤ 800	d + 40	20,0	17	20,3	
> 800	d + 50	22,0	18,7	22,3	

Operating parameters

Sealing material	Clamping ring	Spring	Temperature	max. speed[1]	max. pressure
SKF ECORUBBER-1	**SKF ECOTAL** SKF ECOMID[2]	**1.4310**	**-30 °C...+80 °C**	**10 m/s**	**0,5 bar (0,05 MPa)**
SKF ECORUBBER-2			-20 °C...+80 °C	15 m/s	
SKF ECORUBBER-3			-50 °C...+80 °C	10 m/s	
SKF ECORUBBER-H			-25 °C...+80 °C	10 m/s	
SKF ECOSIL			-60 °C...+80 °C	5 m/s	-
SKF ECORUBBER-1	SKF ECOPAEK		-30 °C...+100 °C	10 m/s	0,5 bar (0,05 MPa)
SKF ECORUBBER-2			-20 °C...+200 °C	15 m/s	
SKF ECORUBBER-3			-50 °C...+150 °C	10 m/s	
SKF ECORUBBER-H			-25 °C...+150 °C	10 m/s	
SKF ECOSIL			-60 °C...+200 °C	-	-

The stated operation conditions represent general indications. It is recommended not to use all maximum values simultaneously. Surface speed limits apply only to the presence of adequate lubrication film.
[1] Depending on shaft diameter
[2] ≤ Ø260mm: SKF ECOTAL ; > Ø260mm: SKF ECOMID

Ordering example

R02-R, d=100mm, D=115mm, L=8mm, SKF ECORUBBER-1 / SKF ECOTAL / 1.4310

Rotary Seal R02-R (Profile) **100 x 115 x 8** (d x D x L) **SKF ECORUBBER-1 / SKF ECOTAL / 1.4310** (Sealing material / Clamping ring / Spring)

Seal data sheet
Rotary seals

R03-P

Seal housing

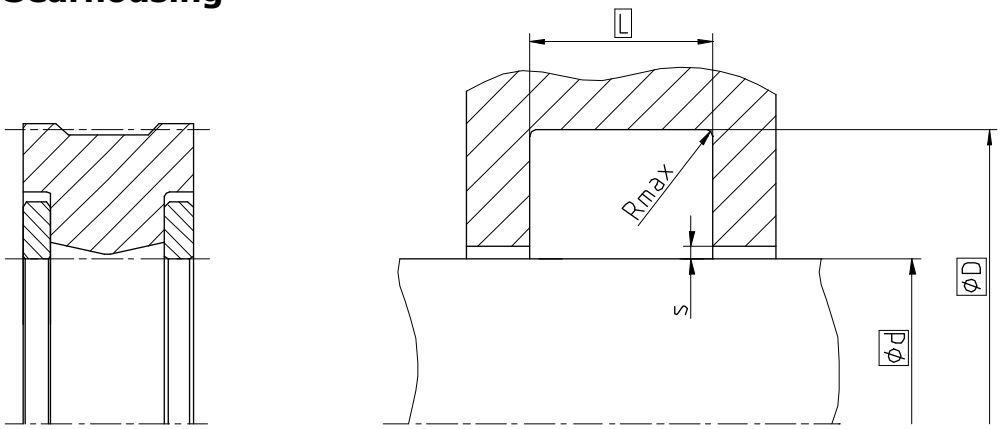

Surface roughness	Rtmax	Ra
Sliding Surface	≤ 2,5 µm	0,1...0,5 µm
Bottom of groove	≤ 6,3 µm	≤ 1,6 µm
Groove face	≤ 15 µm	≤ 3 µm

Ordering dimensions...☐
Hardness: min. 45 HRC (55 HRC recommended), Hardened depth > 0,3mm
Bearing area: 50...95% and a cutting depth of 0,5xRz based on Cref = 0%

Standard dimensions

Ød*	**ØD** H9	**L** +0,2	**Rmax**	**s**
≥ 21 ... ≤ 22	d + 8	6,5	0,2	e8/H9
> 22 ... ≤ 36	d + 10	8		
> 36 ... ≤ 56	d + 12	8		
> 56 ... ≤ 85	d + 15	11		f7/H7
> 85 ... ≤ 140	d + 20	13		
> 140 ... ≤ 200	d + 25	16		
> 200 ... ≤ 300	d + 30	19		
> 300	d + 40	26		

*Tolerance area shaft ≤ 56mm: e8 > 56mm: f7

Operating parameters

Sealing material	Backup ring	Temperature	max. speed	max. pressure[1]
ECOPUR®	**SKF ECOTAL** SKF ECOMID[2]	**-30 °C...+100 °C**	**0,2 m/s**	**400 bar (40 MPa)**
H-ECOPUR™		-20 °C...+100 °C		
S-ECOPUR™		-40 °C...+100 °C	0,3 m/s	
T-ECOPUR™		-20 °C...+100 °C	0,2 m/s	

The stated operation conditions represent general indications. It is recommended not to use all maximum values simultaneously. Surface speed limits apply only to the presence of adequate lubrication film.
[1] Pressure ratings depend on the size of the extrusion gap.
[2] ≤ Ø260mm: SKF ECOTAL ; > Ø260mm: SKF ECOMID

Ordering example

R03-P, d=100mm, D=120mm, L=13mm, ECOPUR® / SKF ECOTAL

Rotary Seal R03-P	**100 x 120 x 13**	**ECOPUR® / SKF ECOTAL**
Profile	d x D x L	Sealing material / Backup ring

Seal data sheet

Rotary seals

R03-R

Seal housing

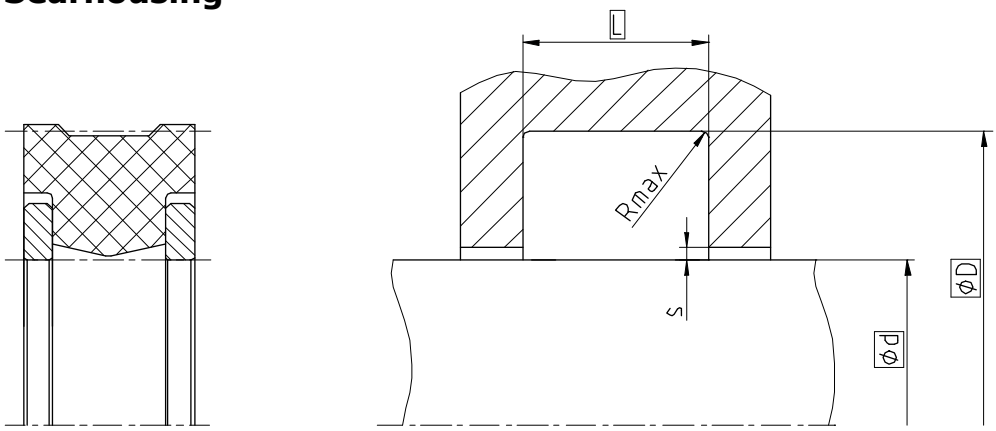

Surface roughness	Rtmax	Ra
Sliding Surface	≤ 2,5 µm	0,1...0,5 µm
Bottom of groove	≤ 6,3 µm	≤ 1,6 µm
Groove face	≤ 15 µm	≤ 3 µm

Ordering dimensions...□
Hardness: min. 45 HRC (55 HRC recommended), Hardened depth > 0,3mm
Bearing area: 50...95% and a cutting depth of 0,5xRz based on Cref = 0%

Standard dimensions

Ød*	**ØD** H9	**L** +0,2	**Rmax**	**s**
> 22 ... ≤ 36	d + 10	8	0,2	e8/H9
> 36 ... ≤ 56	d + 12	8		
> 56 ... ≤ 85	d + 15	11		f7/H7
> 85 ... ≤ 140	d + 20	13		
> 140 ... ≤ 200	d + 25	16		
> 200 ... ≤ 300	d + 30	19		
> 300	d + 40	26		

*Tolerance area shaft ≤ 56mm: e8 > 56mm: f7

Operating parameters

Sealing material	Backup ring	Temperature	max. speed	max. pressure[1]
SKF ECORUBBER-1	**SKF ECOTAL** SKF ECOMID[2]	**-30 °C...+100 °C**	**0,2 m/s**	**250 bar (25 MPa)**
SKF ECORUBBER-2	SKF ECOFLON 2	-20 °C...+200 °C		
SKF ECORUBBER-3	SKF ECOTAL SKF ECOMID[2]	-40 °C...+100 °C		
	SKF ECOFLON 2	-50 °C...+150 °C		
SKF ECORUBBER-H	SKF ECOTAL SKF ECOMID[2]	-25 °C...+100 °C		
	SKF ECOFLON 2	-25 °C...+150 °C		
SKF ECOFLAS	SKF ECOPAEK	-10 °C...+200 °C		

The stated operation conditions represent general indications. It is recommended not to use all maximum values simultaneously. Surface speed limits apply only to the presence of adequate lubrication film.
[1] Pressure ratings depend on the size of the extrusion gap.
[2] ≤ Ø260mm: SKF ECOTAL ; > Ø260mm: SKF ECOMID

Ordering example

R03-R, d=100mm, D=120mm, L=13mm, SKF ECORUBBER-1 / SKF ECOTAL

Rotary Seal R03-R	**100 x 120 x 13**	**SKF ECORUBBER-1 / SKF ECOTAL**
Profile	d x D x L	Sealing material / Backup ring

Seal data sheet

Rotary seals

R04-A

Seal housing

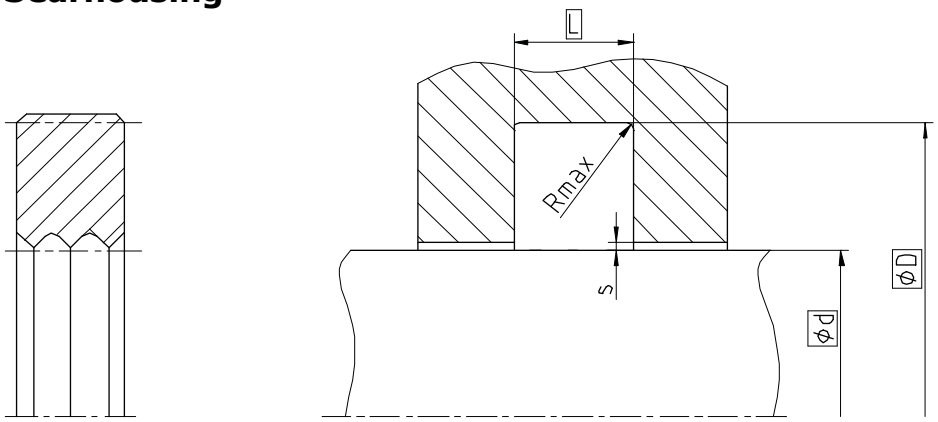

Surface roughness	Rtmax	Ra
Sliding Surface	≤ 2,5 µm	0,1...0,5 µm
Bottom of groove	≤ 6,3 µm	≤ 1,6 µm
Groove face	≤ 15 µm	≤ 3 µm

Ordering dimensions...□
Hardness: min. 45 HRC (55 HRC recommended), Hardened depth > 0,3mm
Bearing area: 50...95% and a cutting depth of 0,5xRz based on Cref = 0%

Standard dimensions

Ød*	**ØD** H9	**L** +0,2	**Rmax**	**s**
≥ 5 ... ≤ 22	d + 8	4,5	0,2	e8 / H9
> 22 ... ≤ 36	d + 10	5,6		
> 36 ... ≤ 56	d + 12	5,6		
> 56 ... ≤ 85	d + 15	7,7		f7 / H7
> 85 ... ≤ 140	d + 20	9,2		
> 140 ... ≤ 200	d + 25	11,3		
> 200 ... ≤ 300	d + 30	13,5		
> 300	d + 40	18,5		

*Tolerance area shaft ≤ 56mm: e8 > 56mm: f7

Operating parameters

Sealing material	Temperature	max. speed	max. pressure[1]
ECOPUR®	**-30 °C...+110 °C**	**0,2 m/s**	**160 bar (16 MPa)**
H-ECOPUR™	-20 °C...+110 °C		
S-ECOPUR™	-20 °C...+110 °C	0,3 m/s	
T-ECOPUR™	-50 °C...+110 °C	0,2 m/s	
SKF ECORUBBER-1	-30 °C...+100 °C	0,2 m/s	100 bar (10 MPa)
SKF ECORUBBER-2	-20 °C...+200 °C		
SKF ECORUBBER-3	-50 °C...+150 °C		
SKF ECORUBBER-H	-25 °C...+150 °C		
SKF ECOFLAS	-10 °C...+200 °C		

The stated operation conditions represent general indications. It is recommended not to use all maximum values simultaneously. Surface speed limits apply only to the presence of adequate lubrication film.
[1] Pressure ratings depend on the size of the extrusion gap.

Ordering example

R04-A, d=100mm, D=120mm, L=13mm, ECOPUR®

Rotary Seal R04-A (Profile) **100 x 120 x 13** (d x D x L) **ECOPUR®** (Sealing material)

Seal data sheet

Rotary seals

R05-A

Seal housing

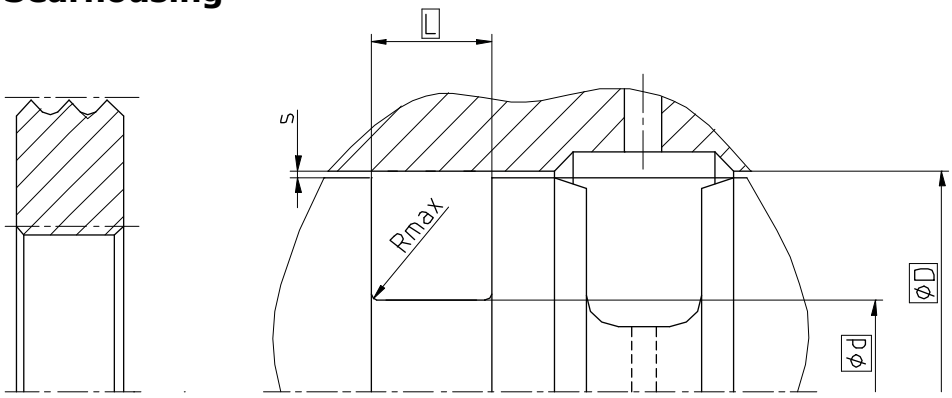

Surface roughness	Rtmax	Ra
Sliding Surface	≤ 2,5 µm	0,1...0,5 µm
Bottom of groove	≤ 6,3 µm	≤ 1,6 µm
Groove face	≤ 15 µm	≤ 3 µm

Ordering dimensions...☐
Hardness: min. 45 HRC (55 HRC recommended), Hardened depth > 0,3mm
Bearing area: 50...95% and a cutting depth of 0,5xRz based on Cref = 0%

Standard dimensions

ØD[1]	**Ød** h8	**L** +0,2	**Rmax**	**s**
≥ 13 ... ≤ 30	D - 8	4,5	0,2	H9 / e8
> 30 ... ≤ 46	D - 10	5,6		
> 46 ... ≤ 68	D - 12	5,6		
> 68 ... ≤ 100	D - 15	7,7		H7 / f7
> 100 ... ≤ 160	D - 20	9,2		
> 160 ... ≤ 225	D - 25	11,3		
> 225 ... ≤ 330	D - 30	13,5		
> 330	D - 40	18,5		

[1] Tolerance area counter surface ≤ 68mm: H9 > 68mm: H7

Operating parameters

Sealing material	Temperature	max. speed	max. pressure[1]
ECOPUR®	**-30 °C...+110 °C**	**0,2 m/s**	**160 bar (16 MPa)**
H-ECOPUR™	-20 °C...+110 °C		
S-ECOPUR™	-20 °C...+110 °C	0,3 m/s	
T-ECOPUR™	-50 °C...+110 °C	0,2 m/s	
SKF ECORUBBER-1	-30 °C...+100 °C	0,2 m/s	100 bar (10 MPa)
SKF ECORUBBER-2	-20 °C...+200 °C		
SKF ECORUBBER-3	-50 °C...+150 °C		
SKF ECORUBBER-H	-25 °C...+150 °C		
SKF ECOFLAS	-10 °C...+200 °C		

The stated operation conditions represent general indications. It is recommended not to use all maximum values simultaneously. Surface speed limits apply only to the presence of adequate lubrication film.
[1] Pressure ratings depend on the size of the extrusion gap.

Ordering example

R05-A, d=100mm, D=120mm, L=9,2mm, ECOPUR®

Rotary Seal R05-A	**100 x 120 x 9,2**	**ECOPUR®**
Profile	d x D x L	Sealing material

Seal data sheet
Rotary seals

R06-P

Seal housing

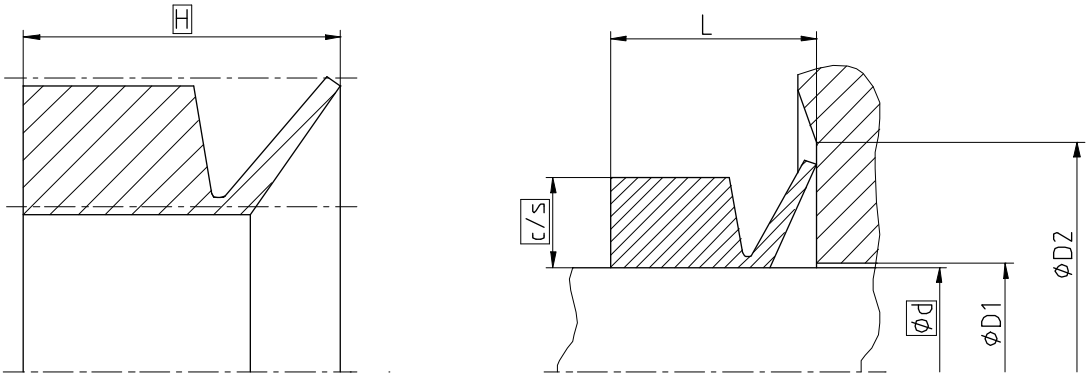

Surface roughness	Rtmax	Ra
Sliding Surface	≤ 2,5 µm	0,1...0,5 µm
Bottom of groove	≤ 6,3 µm	≤ 1,6 µm
Groove face	≤ 15 µm	≤ 3 µm

Ordering dimensions...☐

Bearing area: 50...95% and a cutting depth of 0,5xRz based on Cref = 0%

Standard dimensions

Ød h11	**ØD1** max	**ØD2** min	**c/s**	**H**	**L**
≥ 5 ... < 40	d + 2,0	d + 12	4	7,5	6
≥ 40 ... < 70	d + 2,5	d + 15	5	9	7
≥ 70 ... < 100	d + 3,0	d + 18	6	10,85	9
≥ 100 ... < 150	d + 3,5	d + 21	7	12,7	10,5
≥ 150 ... < 210	d + 4,0	d + 24	8	14,6	12
≥ 210 ... < 300	d + 5,0	d + 30	10	17,56	14,5
≥ 300 ... < 450	d + 6,25	d + 36,5	12,5	21,26	17,5
≥ 450	d + 7,5	d + 45	15	25	20

Operating parameters

Sealing material	Temperature	max. speed[1]	max. pressure
ECOPUR®	**-30 °C...+110 °C**	**25 m/s**	-
H-ECOPUR™	-20 °C...+110 °C		
S-ECOPUR™	-20 °C...+110 °C		
T-ECOPUR™	-50 °C...+110 °C		
G-ECOPUR™	-30 °C...+110 °C		

The stated operation conditions represent general indications. It is recommended not to use all maximum values simultaneously. Surface speed limits apply only to the presence of adequate lubrication film.
[1] For speeds above 10 m/s, axial support is recommended.

Ordering example

R06-P, d=100mm, c/s=7mm, H=12,7mm, ECOPUR®

Rotary Seal R06-P	**100 x 7 x 12,7**	**ECOPUR®**
Profile	d x c/s x H	Sealing material

Seal data sheet
Rotary seals

R06-R

Seal housing

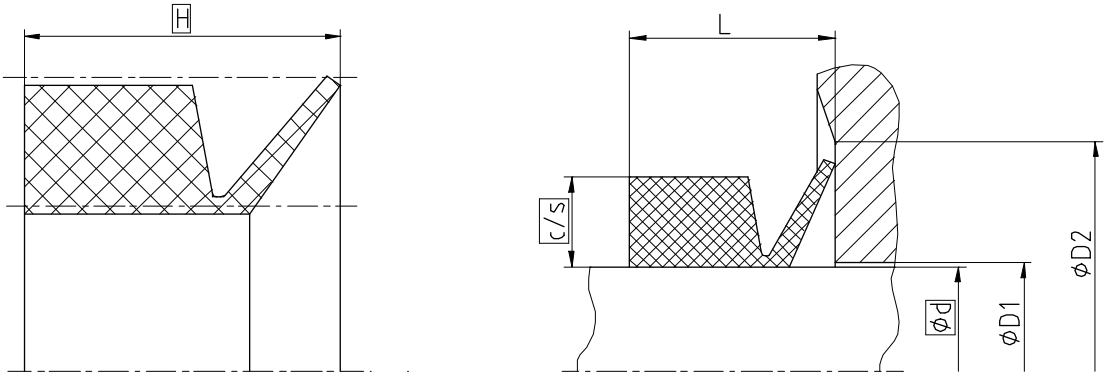

Surface roughness	Rtmax	Ra
Sliding Surface	≤ 2,5 µm	0,1...0,5 µm
Bottom of groove	≤ 6,3 µm	≤ 1,6 µm
Groove face	≤ 15 µm	≤ 3 µm

Ordering dimensions...☐

Bearing area: 50...95% and a cutting depth of 0,5xRz based on Cref = 0%

Standard dimensions

Ød h11	**ØD1** max	**ØD2** min	**c/s**	**H**	**L**
≥ 5 ... < 40	d + 2,0	d + 12	4	7,5	6
≥ 40 ... < 70	d + 2,5	d + 15	5	9	7
≥ 70 ... < 100	d + 3,0	d + 18	6	10,85	9
≥ 100 ... < 150	d + 3,5	d + 21	7	12,7	10,5
≥ 150 ... < 210	d + 4,0	d + 24	8	14,6	12
≥ 210 ... < 300	d + 5,0	d + 30	10	17,56	14,5
≥ 300 ... < 450	d + 6,25	d + 36,5	12,5	21,26	17,5
≥ 450	d + 7,5	d + 45	15	25	20

Operating parameters

Sealing material	Temperature	max. speed[1]	max. pressure
SKF ECORUBBER-1	**-30 °C...+100 °C**	**25 m/s**	-
SKF ECORUBBER-2	-20 °C...+200 °C		
SKF ECORUBBER-3	-50 °C...+150 °C		
SKF ECORUBBER-H	-25 °C...+150 °C		

The stated operation conditions represent general indications. It is recommended not to use all maximum values simultaneously. Surface speed limits apply only to the presence of adequate lubrication film.
[1] For speeds above 10 m/s, axial support is recommended.

Ordering example

R06-R, d=100mm, c/s=7mm, H=12,7mm, SKF ECORUBBER-1

Rotary Seal R06-R	**100 x 7 x 12,7**	**SKF ECORUBBER-1**
Profile	d x c/s x H	Sealing material

Seal data sheet
Rotary seals

R07-P

Seal housing

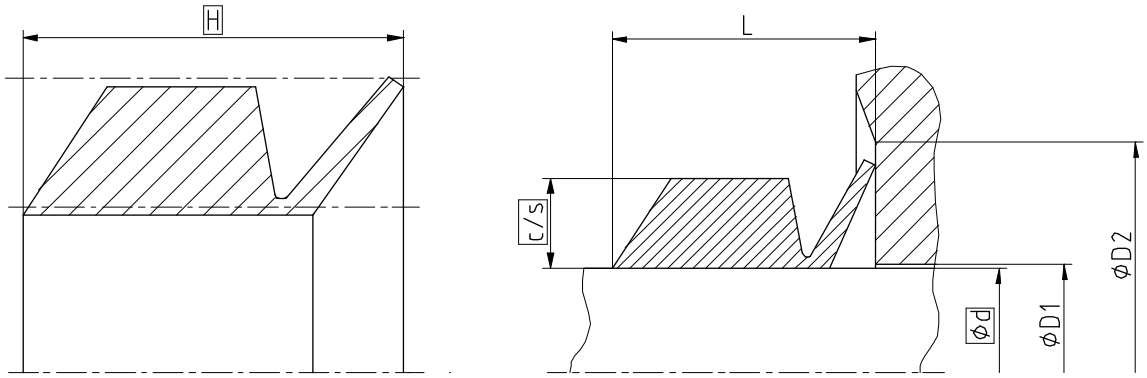

Surface roughness	Rtmax	Ra
Sliding Surface	≤ 2,5 µm	0,1...0,5 µm
Bottom of groove	≤ 6,3 µm	≤ 1,6 µm
Groove face	≤ 15 µm	≤ 3 µm

Ordering dimensions...☐

Bearing area: 50...95% and a cutting depth of 0,5xRz based on Cref = 0%

Standard dimensions

Ød h11	**ØD1** max	**ØD2** min	**c/s**	**H**	**L**
≥ 5 ... < 40	d + 2,0	d + 12	4	9,76	8,5
≥ 40 ... < 70	d + 2,5	d + 15	5	11,82	10
≥ 70 ... < 100	d + 3,0	d + 18	6	14,23	12,5
≥ 100 ... < 150	d + 3,5	d + 21	7	16,65	14,5
≥ 150 ... < 210	d + 4,0	d + 24	8	19,11	16,5
≥ 210 ... < 300	d + 5,0	d + 30	10	23,20	20,5
≥ 300 ... < 450	d + 6,25	d + 36,5	12,5	28,31	24,5
≥ 450	d + 7,5	d + 45	15	33,42	28,5

Operating parameters

Sealing material	Temperature	max. speed[1]	max. pressure
ECOPUR®	**-30 °C...+110 °C**	**25 m/s**	-
H-ECOPUR™	-20 °C...+110 °C		
S-ECOPUR™	-20 °C...+110 °C		
T-ECOPUR™	-50 °C...+110 °C		
G-ECOPUR™	-30 °C...+110 °C		

The stated operation conditions represent general indications. It is recommended not to use all maximum values simultaneously. Surface speed limits apply only to the presence of adequate lubrication film.
[1] For speeds above 10 m/s, axial support is recommended.

Ordering example

R07-P, d=100mm, c/s=7mm, H=16,65mm, ECOPUR®

Rotary Seal R07-P	**100 x 7 x 16,65**	**ECOPUR®**
Profile	d x c/s x H	Sealing material

Seal data sheet
Rotary seals

R07-R

Seal housing

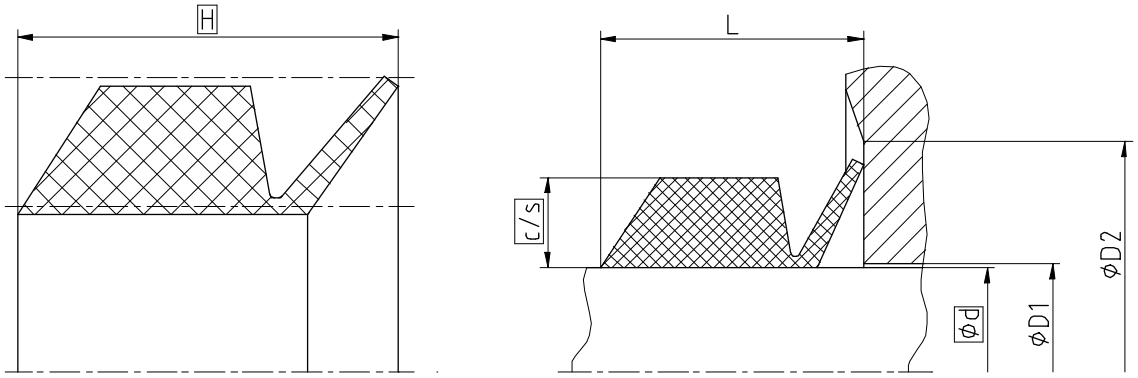

Surface roughness	Rtmax	Ra
Sliding Surface	≤ 2,5 µm	0,1...0,5 µm
Bottom of groove	≤ 6,3 µm	≤ 1,6 µm
Groove face	≤ 15 µm	≤ 3 µm

Ordering dimensions...☐

Bearing area: 50...95% and a cutting depth of 0,5xRz based on Cref = 0%

Standard dimensions

Ød h11	**ØD1** max	**ØD2** min	**c/s**	**H**	**L**
≥ 5 ... < 40	d + 2,0	d + 12	4	9,76	8,5
≥ 40 ... < 70	d + 2,5	d + 15	5	11,82	10
≥ 70 ... < 100	d + 3,0	d + 18	6	14,23	12,5
≥ 100 ... < 150	d + 3,5	d + 21	7	16,65	14,5
≥ 150 ... < 210	d + 4,0	d + 24	8	19,11	16,5
≥ 210 ... < 300	d + 5,0	d + 30	10	23,20	20,5
≥ 300 ... < 450	d + 6,25	d + 36,5	12,5	28,31	24,5
≥ 450	d + 7,5	d + 45	15	33,42	28,5

Operating parameters

Sealing material	Temperature	max. speed[1]	max. pressure
SKF ECORUBBER-1	**-30 °C...+100 °C**	**25 m/s**	-
SKF ECORUBBER-2	-20 °C...+200 °C		
SKF ECORUBBER-3	-50 °C...+150 °C		
SKF ECORUBBER-H	-25 °C...+150 °C		

The stated operation conditions represent general indications. It is recommended not to use all maximum values simultaneously. Surface speed limits apply only to the presence of adequate lubrication film.
[1] For speeds above 10 m/s, axial support is recommended.

Ordering example

R07-R, d=100mm, c/s=7mm, H=16,65mm, SKF ECORUBBER-1

Rotary Seal R07-R (Profile) **100 x 7 x 16,65** (d x c/s x H) **SKF ECORUBBER-1** (Sealing material)

Seal data sheet
Rotary seals

R08-A

Seal housing

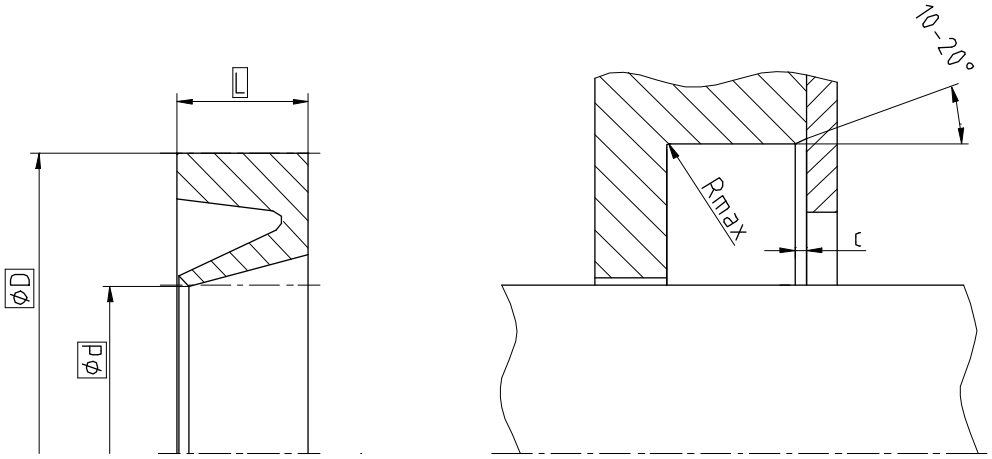

Surface roughness	Rtmax	Ra
Sliding Surface	≤ 2,5 µm	0,1...0,5 µm
Bottom of groove	≤ 6,3 µm	≤ 1,6 µm
Groove face	≤ 15 µm	≤ 3 µm

Ordering dimensions...☐
Hardness: min. 45 HRC (55 HRC recommended), Hardened depth > 0,3mm
Bearing area: 50...95% and a cutting depth of 0,5xRz based on Cref = 0%

Standard dimensions

NB	c	Rmax
6,0	1	0,4
7,5	1,2	
10,0	1,5	
15,0	1,8	
20,0	3	
25,0	3,3	

* Because of the design diversity of this profile, it is not useful to classify it.
* The standard design considers no preload on the sealing lip.

Operating parameters

Sealing material	Temperature
ECOPUR®	**-30 °C...+110 °C**
H-ECOPUR™	-20 °C...+110 °C
S-ECOPUR™	-20 °C...+110 °C
T-ECOPUR™	-50 °C...+110 °C
G-ECOPUR™	-30 °C...+110 °C
SKF ECORUBBER-1	-30 °C...+100 °C
SKF ECORUBBER-2	-20 °C...+200 °C
SKF ECORUBBER-3	-50 °C...+150 °C
SKF ECORUBBER-H	-25 °C...+150 °C
SKF ECOSIL	-60 °C...+200 °C
SKF ECOFLAS	-10 °C...+200 °C

Ordering example

R08-A, d=100mm, D=115mm, L=8mm, ECOPUR®

Rotary Seal R08-A	**100 x 115 x 8**	**ECOPUR®**
Profile	d x D x L	Sealing material

Seal data sheet

Rotary seals

R09-F

Seal housing

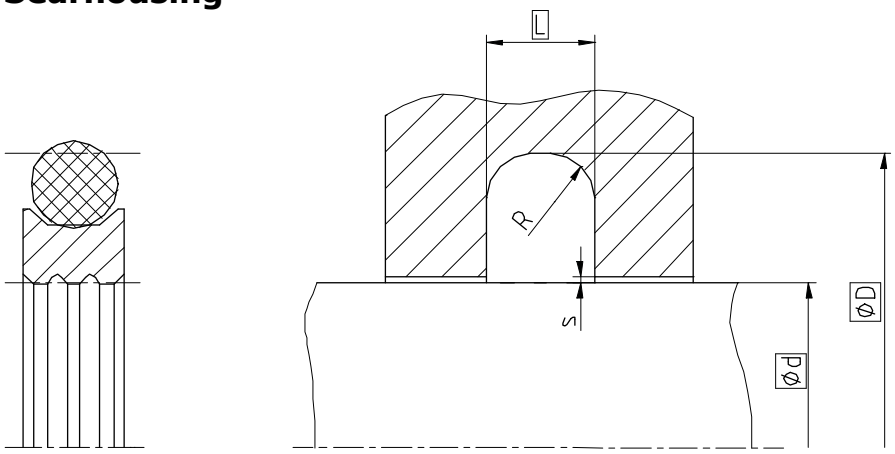

Surface roughness	Rtmax	Ra
Sliding Surface	≤ 2 µm	0,05...0,3 µm
Bottom of groove	≤ 6,3 µm	≤ 1,6 µm
Groove face	≤ 15 µm	≤ 3 µm

Ordering dimensions...☐
Hardness: On the surface min 55 HRC
Hardened depth > 0,3mm
Bearing area: 50...95% and a cutting depth of 0,5xRz based on Cref = 0%

Standard dimensions

Ød f8	**ØD** H9	**L** +0,2	**R**	**max. radial extrusion gap s***		
				100 bar	200 bar	350 bar
≥ 5 ... < 18,9	d + 4,9	2,2	0,3	0,15	0,10	0,10
≥ 19 ... < 38	d + 7,5	3,2	0,5	0,20	0,15	0,10
≥ 38 ... < 200	d + 11	4,2	0,7	0,25	0,20	0,10
≥ 200 ... < 256	d + 15,5	6,3	1,2	0,30	0,25	0,10
≥ 256 ... < 650	d + 21	8,1	1,5	0,30	0,25	0,15
≥ 650 ... ≤ 1000	d + 28	9,5	2,0	0,45	0,30	0,20

* Extrusion gap applies to a temperature of 80 °C, higher temperatures require lower values.

Operating parameters

Sealing material	Energizer	Temperature	max. speed	max. pressure[1]
SKF ECOFLON 4	**NBR70**	**-30 °C...+100 °C**	**0,4 m/s**	**350 bar (35 MPa)**

The stated operation conditions represent general indications. It is recommended not to use all maximum values simultaneously. Surface speed limits apply only to the presence of adequate lubrication film.
[1] Pressure ratings depend on the size of the extrusion gap.

Ordering example

R09-F, d=100mm, D=111mm, L=4,2mm, SKF ECOFLON 4 / NBR70

Rotary Seal R09-F	**100 x 111 x 4,2**	**SKF ECOFLON 4 / NBR70**
Profile	d x D x L	Sealing material / Energizer

Seal data sheet
Rotary seals

R09-FS

Seal housing

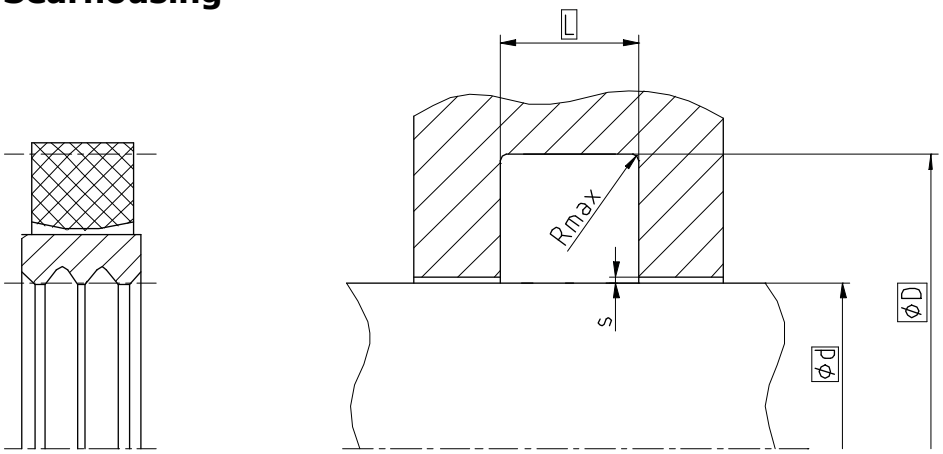

Surface roughness	Rtmax	Ra
Sliding Surface	≤ 2 µm	0,05...0,3 µm
Bottom of groove	≤ 6,3 µm	≤ 1,6 µm
Groove face	≤ 15 µm	≤ 3 µm

Ordering dimensions...☐
Hardness: On the surface min 55 HRC
Hardened depth > 0,3mm
Bearing area: 50...95% and a cutting depth of 0,5xRz based on Cref = 0%

Standard dimensions

Ød f8	**ØD** H9	**L** +0,2	**Rmax**	**max. radial extrusion gap s***		
				100 bar	200 bar	350 bar
≥ 5 ... < 49,9	d + 10	5	0,4	0,25	0,2	0,10
≥ 50 ... < 60	d + 15	7,5		0,3	0,25	0,10
≥ 60 ... < 200	d + 20	10		0,3	0,25	0,15
≥ 200 ... < 300	d + 25	12,5		0,3	0,25	0,15
≥ 300 ... < 530	d + 30	15		0,45	0,3	0,2
≥ 530 ... < 650	d + 35	17,5		0,45	0,3	0,2
≥ 650 ... < 1000	d + 40	20		0,5	0,35	0,25

* Extrusion gap applies to a temperature of 80 °C, higher temperatures require lower values.

Operating parameters

Sealing material	Energizer	Temperature	max. speed	max. pressure[1]
SKF ECOFLON 4	**SKF ECORUBBER-1**	**-30 °C...+100 °C**	**0,4 m/s**	**350 bar (35 MPa)**

The stated operation conditions represent general indications. It is recommended not to use all maximum values simultaneously. Surface speed limits apply only to the presence of adequate lubrication film.
[1] Pressure ratings depend on the size of the extrusion gap.

Ordering example

R09-FS, d=100mm, D=120mm, L=10mm, SKF ECOFLON 4 / SKF ECORUBBER-1

Rotary Seal R09-FS	**100 x 120 x 10**	**SKF ECOFLON 4 / SKF ECORUBBER-1**
Profile	d x D x L	Sealing material / Energizer

Seal data sheet
Rotary seals

R10-F

Seal housing

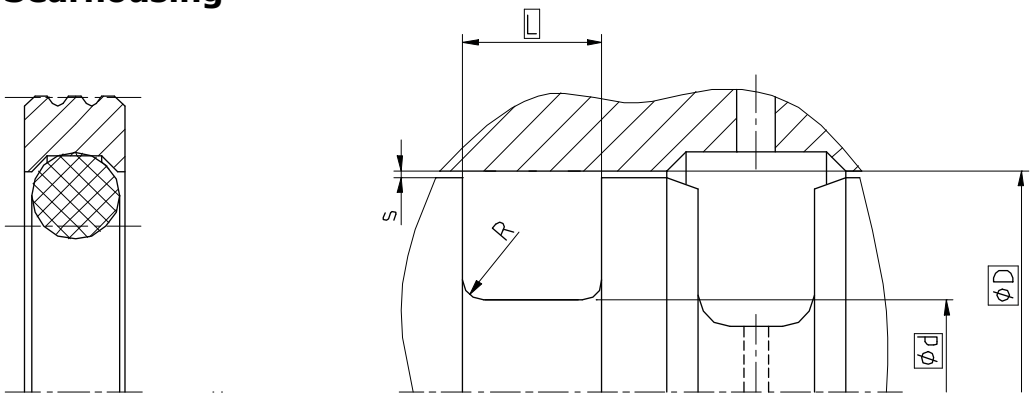

Surface roughness	Rtmax	Ra
Sliding Surface	≤ 2 µm	0,05...0,3 µm
Bottom of groove	≤ 6,3 µm	≤ 1,6 µm
Groove face	≤ 15 µm	≤ 3 µm

Ordering dimensions...☐
Hardness: On the surface min 55 HRC
Hardened depth > 0,3mm
Bearing area: 50...95% and a cutting depth of 0,5xRz based on Cref = 0%

Standard dimensions

ØD H8	**Ød** h8	**L** +0,2	**R**	**max. radial extrusion gap s***		
				100 bar	200 bar	350 bar
≥ 10 ... < 18,9	D - 4,9	2,2	0,3	0,15	0,10	0,10
≥ 19 ... < 38	D - 7,5	3,2	0,5	0,20	0,15	0,10
≥ 38 ... < 200	D - 11	4,2	0,7	0,25	0,20	0,10
≥ 200 ... < 256	D - 15,5	6,3	1,2	0,30	0,25	0,10
≥ 256 ... < 650	D - 21	8,1	1,5	0,30	0,25	0,15
≥ 650 ... ≤ 1000	D - 28	9,5	2,0	0,45	0,30	0,20

* Extrusion gap applies to a temperature of 80 °C, higher temperatures require lower values.

Operating parameters

Sealing material	Energizer	Temperature	max. speed	max. pressure[1]
SKF ECOFLON 4	**NBR70**	**-30 °C...+100 °C**	**0,4 m/s**	**350 bar (35 MPa)**

The stated operation conditions represent general indications. It is recommended not to use all maximum values simultaneously. Surface speed limits apply only to the presence of adequate lubrication film.
[1] Pressure ratings depend on the size of the extrusion gap.

Ordering example

R10-F, D=100mm, d=89mm, L=4,2mm, SKF ECOFLON 4 / NBR70

Rotary Seal R10-F	**100 x 89 x 4,2**	**SKF ECOFLON 4 / NBR70**
Profile	D x d x L	Sealing material / Energizer

Seal data sheet

Rotary seals

R10-FS

Seal housing

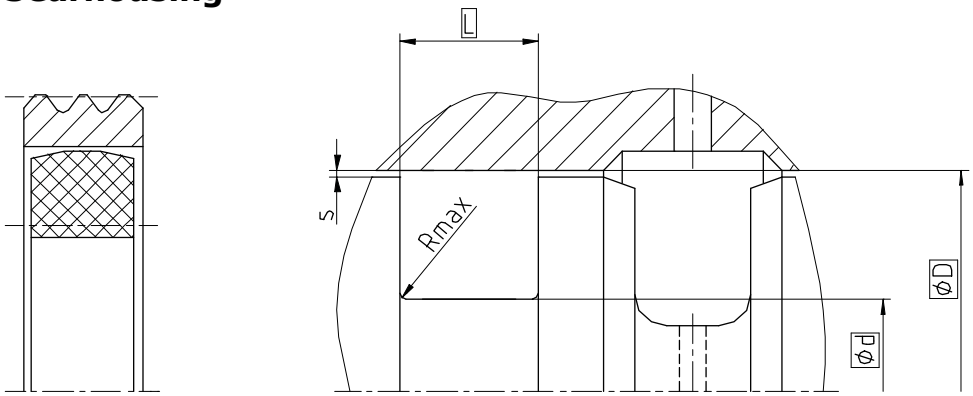

Surface roughness	Rtmax	Ra
Sliding Surface	≤ 2 µm	0,05...0,3 µm
Bottom of groove	≤ 6,3 µm	≤ 1,6 µm
Groove face	≤ 15 µm	≤ 3 µm

Ordering dimensions...☐
Hardness: On the surface min 55 HRC
Hardened depth > 0,3mm
Bearing area: 50...95% and a cutting depth of 0,5xRz based on Cref = 0%

Standard dimensions

ØD H8	**Ød** h8	**L** +0,2	**Rmax**	**max. radial extrusion gap s***		
				100 bar	200 bar	350 bar
≥ 15 ... < 49,9	D - 10	5	0,4	0,25	0,2	0,10
≥ 50 ... < 60	D - 15	7,5		0,3	0,25	0,10
≥ 60 ... < 200	D - 20	10		0,3	0,25	0,15
≥ 200 ... < 300	D - 25	12,5		0,3	0,25	0,15
≥ 300 ... < 530	D - 30	15		0,45	0,3	0,2
≥ 530 ... < 650	D - 35	17,5		0,45	0,3	0,2
≥ 650 ... < 1000	D - 40	20		0,5	0,35	0,25

* Extrusion gap applies to a temperature of 80 °C, higher temperatures require lower values.

Operating parameters

Sealing material	Energizer	Temperature	max. speed	max. pressure[1]
SKF ECOFLON 4	**SKF ECORUBBER-1**	**-30 °C...+100 °C**	**0,4 m/s**	**350 bar (35 MPa)**

The stated operation conditions represent general indications. It is recommended not to use all maximum values simultaneously. Surface speed limits apply only to the presence of adequate lubrication film.
[1] Pressure ratings depend on the size of the extrusion gap.

Ordering example

R10-FS, D=100mm, d=80mm, L=10mm, SKF ECOFLON 4 / SKF ECORUBBER-1

Rotary Seal R10-FS	**100 x 80 x 10**	**SKF ECOFLON 4 / SKF ECORUBBER-1**
Profile	D x d x L	Sealing material / Energizer

Seal data sheet
Rotary seals

R11-F

Seal housing

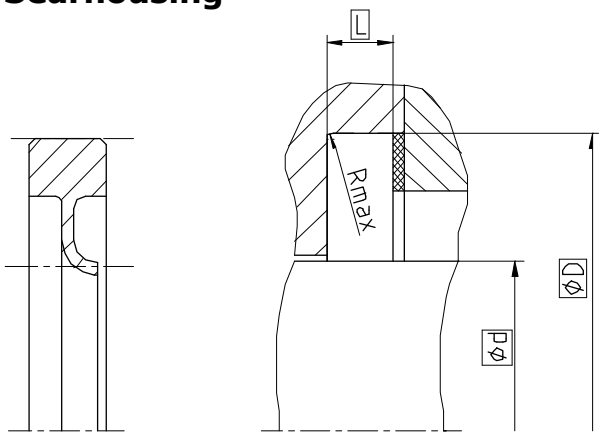

Surface roughness	Rtmax	Ra
Sliding Surface	≤ 2 µm	0,05...0,3 µm
Bottom of groove	≤ 6,3 µm	≤ 1,6 µm
Groove face	≤ 15 µm	≤ 3 µm

Ordering dimensions...☐

Bearing area: 50...95% and a cutting depth of 0,5xRz based on Cref = 0%

Standard dimensions

Ød f8	**ØD** H10	**Lmin** (-Tol.)	**Rmax**
≥ 50 ... ≤ 100	d + 20	4 (-0,05)	0,4
> 100 ... ≤ 150	d + 25	5 (-0,05)	
> 150 ...	d + 30	6 (-0,10)	

Operating parameters

Sealing material	Temperature	max. speed[1]	max. pressure
SKF ECOFLON 2	**-200 °C...+260 °C**	**20 m/s**	**5 bar (0,5 MPa)**
SKF ECOFLON 3			
SKF ECOFLON 4			

The stated operation conditions represent general indications. It is recommended not to use all maximum values simultaneously. Surface speed limits apply only to the presence of adequate lubrication film.
[1] Depending on shaft diameter

Ordering example

R11-F, d=100mm, D=120mm, L=4mm, SKF ECOFLON 4

Rotary Seal R11-F (Profile) **100 x 120 x 4** (d x D x L) **SKF ECOFLON 4** (Sealing material)

Seal data sheet
Rotary seals

R12-F

Seal housing

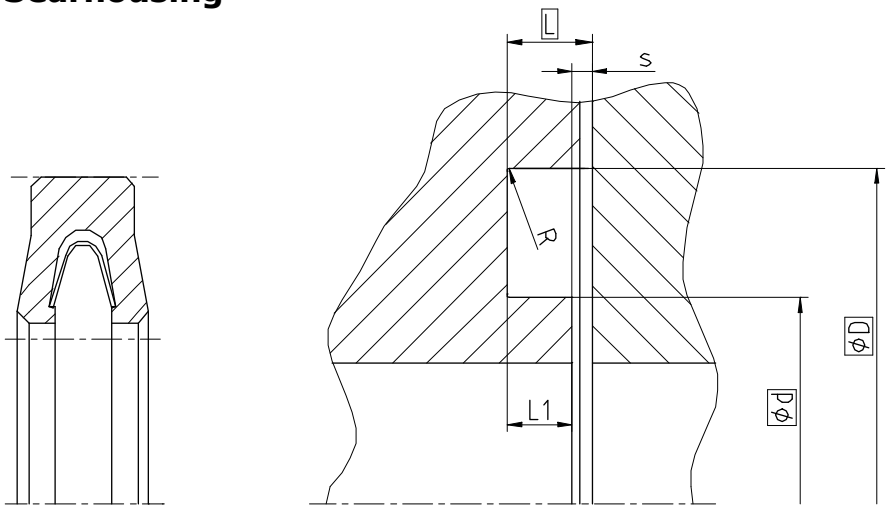

Surface roughness	Rtmax	Ra
Sliding Surface	≤ 2 µm	0,05...0,3 µm
Bottom of groove	≤ 6,3 µm	≤ 1,6 µm
Groove face	≤ 15 µm	≤ 3 µm

Ordering dimensions...☐

Bearing area: 50...95% and a cutting depth of 0,5xRz based on Cref = 0%

Standard dimensions

ØD H8	**Ød**	**L** (+Tol)	**L1** min	**R**	**smax**[1]
≥ 39,6 ... < 46	D - 9,6	3,1 (+0,08)	1,5	0,4	0,15
≥ 46 ... < 125	D - 14,2	4,7 (+0,10)	2,4		0,2
≥ 125 ... < 600	D - 19	6,1 (+0,15)	3,1		0,25

[1] The extrusion gap is valid for the side opposite to the pressure side.

Operating parameters

Sealing material	Spring	Temperature	max. speed	max. pressure[1]
SKF ECOFLON 1	**1.4310**	**-200 °C...+260 °C**	**1 m/s**	**300 bar (30 MPa)**
SKF ECOFLON 2				
SKF ECOFLON 3				
SKF ECOFLON 4				

The stated operation conditions represent general indications. It is recommended not to use all maximum values simultaneously. Surface speed limits apply only to the presence of adequate lubrication film.

[1] Pressure ratings are dependent on the size of the extrusion gap.

Ordering example

R12-F, D=100mm, d=85,8mm, L=1,4mm, SKF ECOFLON 2 / 1.4310

Rotary Seal R12-F	**100 x 85,8 x 1,4**	**SKF ECOFLON 2 / 1.4310**
Profile	D x d x L	Sealing material / Spring

Seal data sheet

Rotary seals

R13

Seal housing

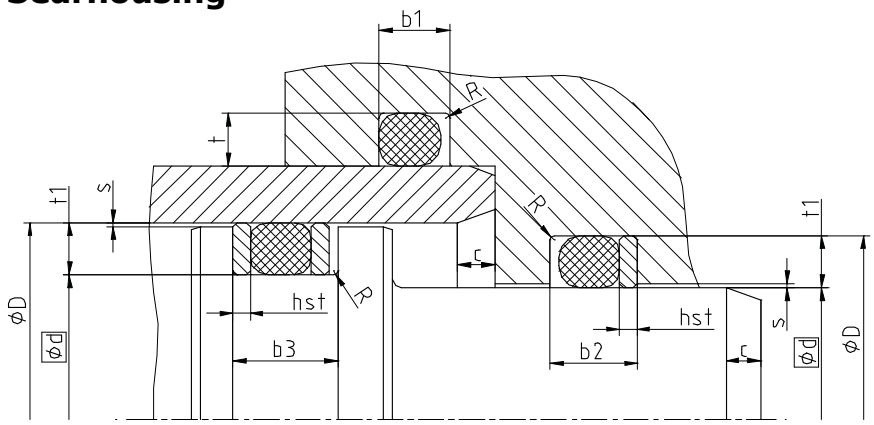

pressure	constant		pulsating	
Surface roughness	Rtmax	Ra	Rtmax	Ra
Sliding Surface[1]	12,5 µm	3,2 µm	6,3 µm	1,6 µm
Bottom of groove[2]				
Groove face				

[1] Rtmax / Ra for dynamic application: 1,6 µm / 0,4 µm
[2] Rtmax / Ra for dynamic application: 6,3 µm / 1,6 µm

Ordering dimensions...☐

Bearing area: 50...95% and a cutting depth of 0,5xRz based on Cref = 0%

Standard dimensions

OD (AS 568A[1])	**OD** (ISO 3601[2])	**t**	**b1**	**t1**	**b2**	**b3**	**R**	**h_{ST}**	**c**	**s**
1,78	1,8	1,35	2,5	1,58	3,5	4,5	0,3	1	3	f7 / H8
2,62	2,65	2,18	3,5	2,42	5,0	6,5	0,3	1,5	3,5	
3,53	3,55	3	4,4	3,70	5,9	7,4	0,5	1,5	4	
5,33	5,3	4,5	6,7	5,60	8,4	10,1	0,6	1,7	5	
6,99	7	5,94	8,8	7,37	10,8	12,8	0,8	2	6	
10	10	8,5	12,5	10,5	15,0	17,5	1	2,5	10	
12	12	10,2	15,5	12,85	18,5	21,5	1	3	12	
15	15	12,75	19	15,88	22	25	1	3	15	

[1] American Standard ; [2] DIN 3771

Operating parameters

Sealing material	Temperature	max. speed	max. pressure[1]
ECOPUR®	**-30 °C...+110 °C**	only recommended for static application	**600 bar (60 MPa)**
H-ECOPUR™	-20 °C...+110 °C		
S-ECOPUR™	-20 °C...+110 °C		
T-ECOPUR™	-50 °C...+110 °C		
G-ECOPUR™	-30 °C...+110 °C		
SKF ECORUBBER-1	-30 °C...+100 °C		160 bar (16 MPa)
SKF ECORUBBER-2	-20 °C...+200 °C		
SKF ECORUBBER-3	-50 °C...+150 °C		
SKF ECORUBBER-H	-25 °C...+150 °C		
SKF ECOSIL	-60 °C...+200 °C		
SKF ECOFLON 1	-200 °C...+260 °C		160 bar (16 MPa)

The stated operation conditions represent general indications. It is recommended not to use all maximum values simultaneously. Surface speed limits apply only to the presence of adequate lubrication film.
[1] We recommend the use of backup rings for ECOPUR above 400 bar and for SKF ECORUBBER above 100 bar.

Ordering example

R13, Inner diameter d=100mm, OD=3,53, ECOPUR®

Rotary Seal R13	**100 x 3,53**	**ECOPUR®**
Profile	d x OD	Sealing material

Seal data sheet

Rotary seals

R14

Seal housing

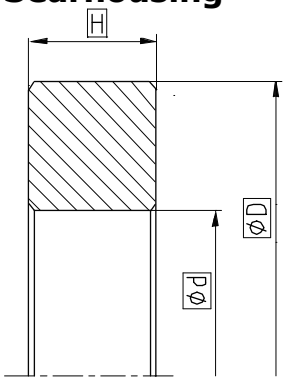

Ordering dimensions...☐

Standard dimensions

Because of the design diversity of this profile, it is not useful to classify it.
The size and position of the tolerance field have to be considered and maybe adapted to special functions.

Operating parameters

Sealing material	Temperature
ECOPUR®	**-30 °C...+110 °C**
H-ECOPUR™	-20 °C...+110 °C
S-ECOPUR™	-20 °C...+110 °C
T-ECOPUR™	-50 °C...+110 °C
G-ECOPUR™	-30 °C...+110 °C
X-ECOPUR™	-30 °C...+110 °C
XH-ECOPUR™	-20 °C...+110 °C
XS-ECOPUR™	-20 °C...+110 °C
G-ECOPUR 54 D™	-20 °C...+110 °C
SKF ECORUBBER-1	-30 °C...+100 °C
SKF ECORUBBER-2	-20 °C...+200 °C
SKF ECORUBBER-3	-50 °C...+150 °C
SKF ECORUBBER-H	-25 °C...+150 °C
SKF ECOSIL	-60 °C...+200 °C
SKF ECOTAL	**-50 °C...+100 °C**
SKF ECOMID	-40 °C...+100 °C
SKF ECOWEAR 1000	-200 °C...+260 °C
ECOPAEK	-60 °C...+260 °C
SKF ECOFLON 1	-200 °C...+260 °C
SKF ECOFLON 2	-200 °C...+260 °C
SKF ECOFLON 3	-200 °C...+260 °C
SKF ECOFLON 3F	-200 °C...+260 °C
SKF ECOFLON 4	-200 °C...+260 °C
SKF ECOTEX	-40 °C...+120 °C

Ordering example

R14, d=85mm, D=100mm, L=2mm, SKF ECOTAL

Rotary Seal R14	**85 x 100 x 2**	**SKF ECOTAL**
Profile	d x D x H	Sealing material

Seal data sheet

Rotary seals

R15-P

Seal housing

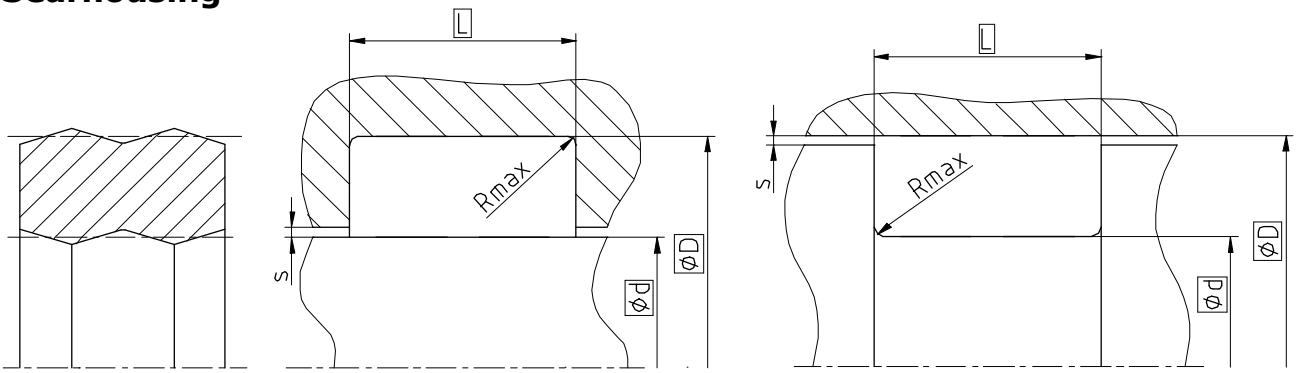

Surface roughness	Rtmax	Ra
Sliding Surface	≤ 2,5 µm	0,1...0,5 µm
Bottom of groove	≤ 6,3 µm	≤ 1,6 µm
Groove face	≤ 15 µm	≤ 3 µm

Ordering dimensions...☐

Bearing area: 50...95% and a cutting depth of 0,5xRz based on Cref = 0%

Standard dimensions

Ød h9	**ØD** H8	**L** +0,2	**Rmax**	**s**
≥ 5 ... < 15	d + 2,5	3,3	0,3	g6 / H8
> 15 ... ≤ 75	d + 5	5,4		
> 75 ... ≤ 150	d + 8	7,7		
> 150 ... ≤ 200	d + 10	9,3	0,6	
> 200 ... ≤ 350	d + 15	13		
> 350 ... ≤ 600	d + 20	17		

Operating parameters

Sealing material	Temperature	max. speed	max. pressure
ECOPUR®	**-30 °C...+110 °C**	only recommended for static applications	**400 bar (40 MPa)**
H-ECOPUR™	-20 °C...+110 °C		
S-ECOPUR™	-20 °C...+110 °C		
T-ECOPUR™	-50 °C...+110 °C		

The stated operation conditions represent general indications. It is recommended not to use all maximum values simultaneously.

Ordering example

R15-P, d=100mm, D=108mm, L=7,7mm, ECOPUR®

Rotary Seal R15-P	**100 x 108 x 7,7**	**ECOPUR®**
Profile	d x D x L	Sealing material

Seal data sheet

Rotary seals

R16

Seal housing

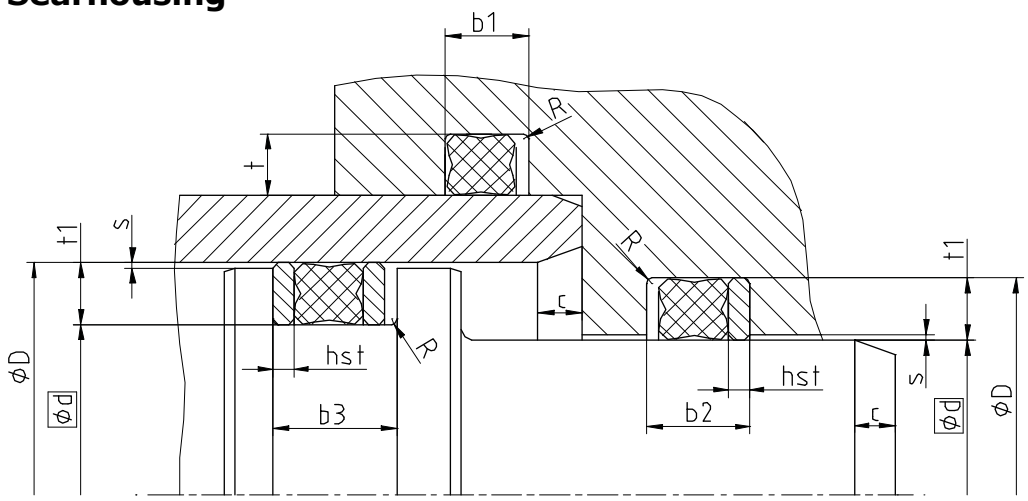

pressure	constant		pulsating	
Surface roughness	Rtmax	Ra	Rtmax	Ra
Sliding Surface[1]	6,3 µm	1,6 µm	4 µm	0,8 µm
Bottom of groove[2] Groove face[2]	12,5 µm	3,2 µm	6,3 µm	1,6 µm

[1] Rtmax / Ra for dynamic application: 1,6 µm / 0,4 µm
[2] Rtmax / Ra for dynamic application: 6,3 µm / 1,6 µm

Ordering dimensions...☐

Bearing area: 50...95% and a cutting depth of 0,5xRz based on Cref = 0%

Standard dimensions

OD (AS 568A[1])	**OD** (ISO 3601[2])	**t**	**b1**	**t1**	**b2**	**b3**	**R**	**h_{ST}**	**c**	**s**
2,62	2,65	2,25	3	2,35	4,4	5,8	0,3	1,4	3,5	0,08
3,53	3,55	3,1	4	3,21	5,4	6,8	0,4	1,4	4	0,08
5,33	5,3	4,75	6	4,89	7,7	9,4	0,4	1,7	5	0,10
6,99	7	6,2	8	6,40	10,5	13	0,6	2,5	6	0,10

[1] American Standard ; [2] DIN 3771

Operating parameters

Sealing material	Temperature	max. speed	max. pressure
SKF ECORUBBER-1	**-30 °C...+100 °C**	only recommended for static applications	**50 bar (5 MPa)**
SKF ECORUBBER-2	-50 °C...+150 °C		
SKF ECORUBBER-3	-20 °C...+200 °C		
SKF ECORUBBER-H	-25 °C...+150 °C		
SKF ECOSIL	-60 °C...+200 °C		-
SKF ECOFLAS	-10 °C...+200 °C		50 bar (5 MPa)

The stated operation conditions represent general indications. It is recommended not to use all maximum values simultaneously.

Ordering example

R16, D=100mm, OD=3,55, SKF ECORUBBER-1

Rotary Seal R16	**100 x 3,55**	**SKF ECORUBBER-1**
Profile	D x OD	Sealing material

Seal data sheet

Rotary seals

R19-F

Seal housing

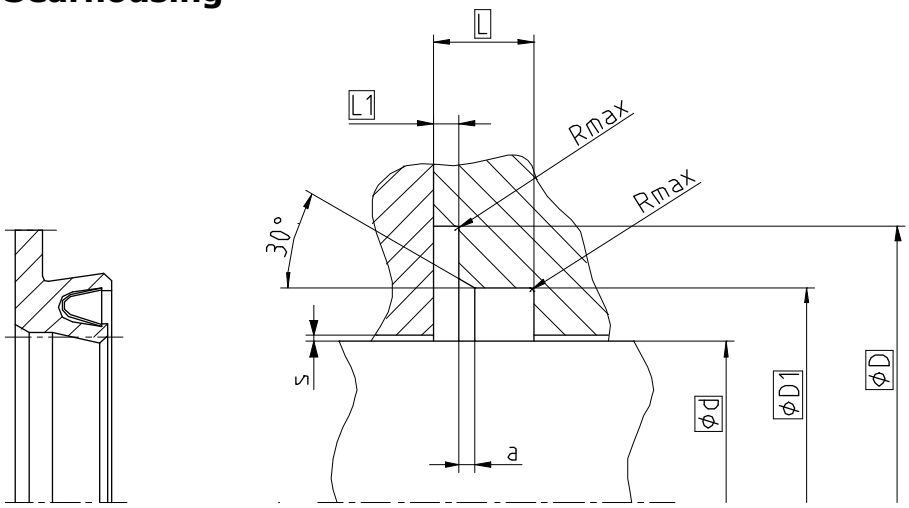

Surface roughness	Rtmax	Ra
Sliding Surface	≤ 2 µm	0,05...0,3 µm
Bottom of groove	≤ 6,3 µm	≤ 1,6 µm
Groove face	≤ 15 µm	≤ 3 µm

Ordering dimensions...☐
Hardness: min. 45 HRC (55 HRC recommended), Hardened depth > 0,3mm
Bearing area: 50...95% and a cutting depth of 0,5xRz based on Cref = 0%

Standard dimensions

Ød f8	**ØD** H10	**ØD1** H9	**L** +0,2	**L1** (-Tol)	**Rmax**	**max. radial extrusion gap s***		
						20 bar	100 bar	150 bar
≥ 5 ... < 20	d + 9,0	d + 5,0	3,6	0,85 (-0,10)	0,4	0,25	0,15	0,10
≥ 20 ... < 40	d + 12,5	d + 7,0	4,8	1,35 (-0,10)		0,35	0,20	0,15
≥ 40 ... < 400	d + 17,5	d + 10,5	7,1	1,80 (-0,15)		0,50	0,25	0,20
≥ 400	d + 22,0	d + 14,0	9,5	2,80 (-0,20)		0,60	0,30	0,25

* Extrusion gap applies to a temperature of 80 °C, higher temperatures require lower values.

Operating parameters

Sealing material	Spring	Temperature	max. speed	max. pressure[1]
SKF ECOFLON 1	**1.4310**	**-200 °C...+260 °C**	**2 m/s**	**150 bar (15 MPa)**
SKF ECOFLON 2				
SKF ECOFLON 3				
SKF ECOFLON 4				

The stated operation conditions represent general indications. It is recommended not to use all maximum values simultaneously. Surface speed limits apply only to the presence of adequate lubrication film.
[1] Pressure ratings depend on the size of the extrusion gap.

Ordering example

R19-F, d=100mm, D=117,5mm, D1=110,5mm, L=7,1mm, L1=1,8mm, SKF ECOFLON 4 / 1.4310

Rotary Seal R19-F	**100 x 117,5/110,5 x 7,1/1,8**	**SKF ECOFLON 4 / 1.4310**
Profile	d x D/D1 x L/L1	Sealing material / Spring

Seal data sheet
Rotary seals

R20-P

Seal housing

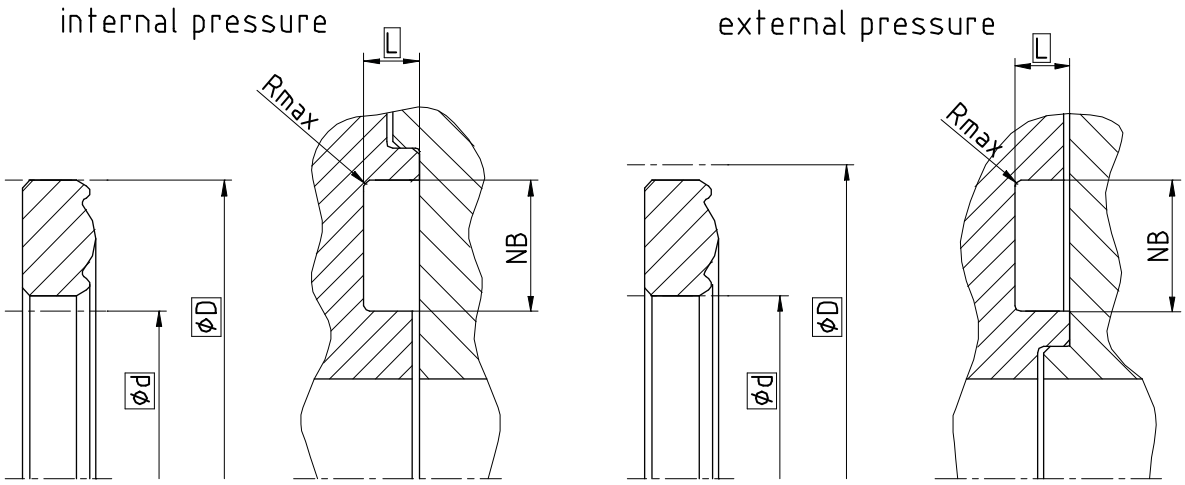

pressure	constant		pulsating	
Surface roughness	Rtmax	Ra	Rtmax	Ra
Sliding Surface	12,5 µm	3,2 µm	6,3 µm	1,6 µm
Bottom of groove				
Groove face				

Ordering dimensions...□

Bearing area: 50...95% and a cutting depth of 0,5xRz based on Cref = 0%

Standard dimensions

Ød h11	**c/s**	**L** +0,2	**Rmax**
≥ 5 ... ≤ 75	7,5	2,5	0,4
> 75 ... ≤ 100	8	4	
> 100 ... ≤ 150	10	5	
> 150 ... ≤ 200	12,5	6	
> 200 ... ≤ 350	15	7,5	
> 350 ... ≤ 600	20	10	

Standard definition for this profile is inner pressure.
Ød h11 = **ØD** H11

Operating parameters

Sealing material	Temperature	max. speed	max. pressure
ECOPUR®	**-30 °C...+110 °C**	only recommended for static applications	**800 bar (80 MPa)**
H-ECOPUR™	-20 °C...+110 °C		
S-ECOPUR™	-50 °C...+110 °C		
T-ECOPUR™	-20 °C...+110 °C		

The stated operation conditions represent general indications. It is recommended not to use all maximum values simultaneously. Standard of this profile is inner pressure.

Ordering example

R20-P, d=100mm, D=108mm, L=7,7mm, ECOPUR®

Rotary Seal R20-P	**100 x 108 x 7,7**	**ECOPUR®**
Profile	d x D x L	Sealing material

Seal data sheet
Rotary seals

R30-A

Seal housing

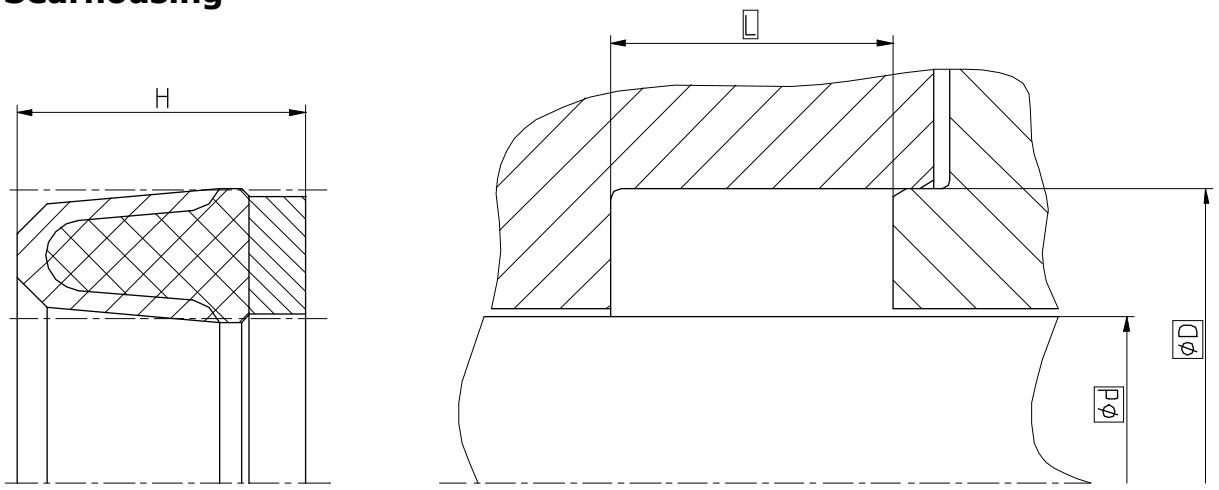

Surface roughness	Rtmax	Ra
Sliding Surface	≤ 2 µm	0,05...0,3 µm
Bottom of groove	≤ 6,3 µm	≤ 1,6 µm
Groove face	≤ 15 µm	≤ 3 µm

Ordering dimensions...☐

Bearing area: 50...95% and a cutting depth of 0,5xRz based on Cref = 0%

Standard dimensions

minimum nominal inside diameter Ød ≥ 5mm
This is not a standard profile and serves as a replacement for an existing installation space. New constructions should use standard profiles.

Operating parameters

Sealing material	casing	Backup ring	Temperature	max. speed	max. pressure
SKF ECORUBBER-1	**SKF ECOFLON 1** SKF ECOFLON 2 SKF ECOFLON 3 SKF ECOFLON 4	**SKF ECOTAL** SKF ECOMID[1]	-30 °C...+100 °C	**0,5 m/s**	**500 bar (50 MPa)**
SKF ECORUBBER-2			-20 °C...+100 °C		
SKF ECORUBBER-3			**-40 °C...+100 °C**		
SKF ECORUBBER-H			-25 °C...+100 °C		
SKF ECORUBBER-2		SKF ECOPAEK	-20 °C...+200 °C		1000 bar (100 MPa)
SKF ECORUBBER-3			-50 °C...+150 °C		
SKF ECORUBBER-H			-25 °C...+150 °C		
SKF ECOFLAS			-10 °C...+200 °C		

The stated operation conditions represent general indications. It is recommended not to use all maximum values simultaneously.
[1] ≤ Ø260mm: SKF ECOTAL ; > Ø260mm: SKF ECOMID

Ordering example

R30-A, d=100mm, D=108mm, L=10mm, SKF ECORUBBER-3 / SKF ECOFLON 1 / SKF ECOTAL

Rotary Seal R30-A (Profile) **100 x 108 x 10** (d x D x L) **SKF ECORUBBER-3 / SKF ECOFLON 1 / SKF ECOTAL** (Sealing material / casing / Backup ring)

Seal data sheet
Rotary seals

R35-A

Seal housing

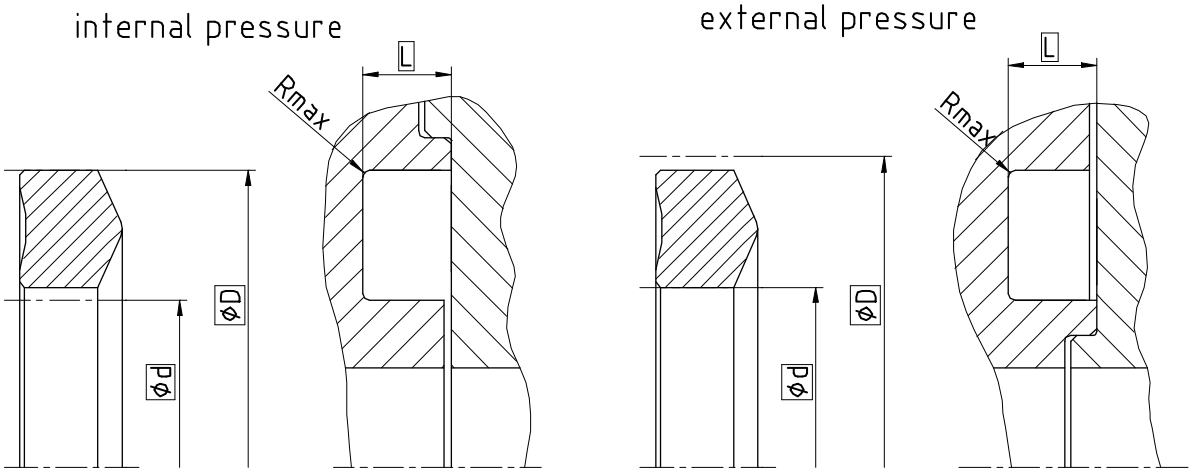

Surface roughness	Rtmax	Ra
Sliding Surface	≤ 2,5 µm	0,1...0,5 µm
Bottom of groove	≤ 6,3 µm	≤ 1,6 µm
Groove face	≤ 15 µm	≤ 3 µm

Ordering dimensions...☐

Bearing area: 50...95% and a cutting depth of 0,5xRz based on Cref = 0%

Standard dimensions

minimum nominal inside diameter Ød ≥ 5mm
Standard definition for this profile is inside pressure.

OD (AS 568A[1])	**OD** (ISO 3601[2])	**NB**	**L**	**R**
1,78	1,8	2	1,4	0,4
2,62	2,65	3	2,25	
3,53	3,55	4	3,1	
5,33	5,3	6	4,75	
6,99	7	8	6,2	

[1] American Standard ; [2] DIN 3771

Operating parameters

Sealing material	Temperature	max. speed	max. pressure
ECOPUR®	**-30 °C...+110 °C**	only recommended for static applications	**800 bar (80 MPa)**
H-ECOPUR™	-20 °C...+110 °C		
S-ECOPUR™	-20 °C...+110 °C		
T-ECOPUR™	-50 °C...+110 °C		
G-ECOPUR™	-30 °C...+110 °C		
SKF ECORUBBER-1	-30 °C...+100 °C		250 bar (25 MPa)
SKF ECORUBBER-2	-20 °C...+200 °C		
SKF ECORUBBER-3	-50 °C...+150 °C		
SKF ECORUBBER-H	-25 °C...+150 °C		
SKF ECOFLAS	-10 °C...+200 °C		
SKF ECOSIL	-60 °C...+200 °C		

The stated operation conditions represent general indications. It is recommended not to use all maximum values simultaneously.

Ordering example

R30-A, d=100mm, D=110mm, L=5mm, ECOPUR®

Rotary Seal R35-A	**100 x 110 x 5**	**ECOPUR®**
Profile	d x D x L	Sealing material

TOP OSA

TIIVISTÄVÄ TEKIJÄ

Guide Elements

Guide Elements

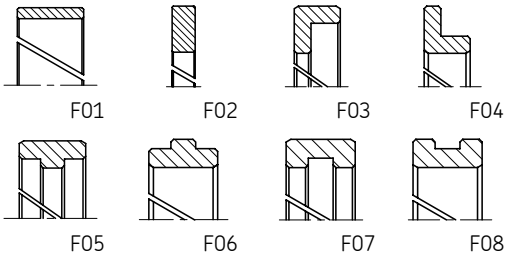

Seal data sheet

Guide rings

F01

Seal housing

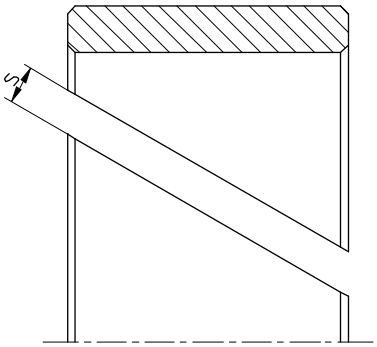

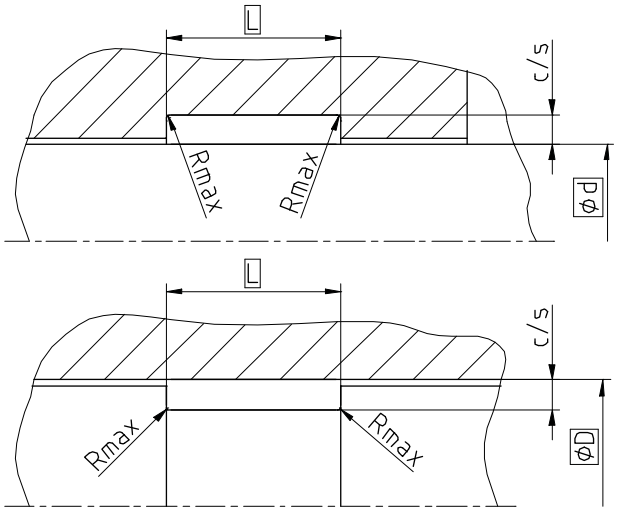

Sealing material	PU/Elastomers		PTFE	
Surface roughness	Rtmax	Ra	Rtmax	Ra
Sliding Surface	≤ 2,5 µm	0,1...0,5 µm	≤ 2 µm	0,05...0,3 µm
Bottom of groove	≤ 6,3 µm	≤ 1,6 µm	≤ 6,3 µm	≤ 1,6 µm
Groove face	≤ 15 µm	≤ 3 µm	≤ 15 µm	≤ 3 µm

Ordering dimensions...□

Bearing area: 50...95% and a cutting depth of 0,5xRz based on Cref = 0%

Standard dimensions

inside dynamic surface		outside dynamic surface				
Ød f8	**ØD** H9	**ØD** H9	**Ød** f8	**c/s**	**L** +0,2	**Rmax**
≥ 6 ... < 30	d + 3	≥ 6 ... < 30	D - 3	1,5	4	0,3
≥ 30 ... < 50	d + 3	≥ 30 ... < 50	D - 3	1,5	5,6	
≥ 50 ... < 100	d + 5	≥ 50 ... < 100	D - 5	2,5	9,7	
≥ 100 ... ≤ 800	d + 5	≥ 100 ... ≤ 800	D - 5	2,5	15	
> 800	d + 8	> 800	D - 8	4	25	

* cutting gap s : values depend on material and temperature. For detailed information please refer to the profile description.

Operating parameters

guiding material	Temperature	max. speed	Specific load[2]
SKF ECOFLON 2	-200 °C...+200 °C	4 m/s	3,0 N/mm²
SKF ECOFLON 3	-200 °C...+200 °C	5 m/s	4,5 N/mm²
SKF ECOFLON 60% Bz.	-200 °C...+200 °C	5 m/s	7,5 N/mm²
SKF ECOTAL[1]	**-50 °C...+100 °C**	**4 m/s**	**25 N/mm²**
SKF ECOMID	-40 °C...+100 °C	4 m/s	25 N/mm²
SKF ECOTEX	-40 °C...+130 °C	4 m/s	90 N/mm²

The stated operation conditions represent general indications. It is recommended not to use all maximum values simultaneously. Surface speed limits apply only to the presence of adequate lubrication film.

[1] ≤ Ø260mm: SKF ECOTAL ; > Ø260mm: SKF ECOMID

[2] Depending on temperature and allowed compression. Detailed information see profile description.

Ordering example

F01, d=100mm, D=105mm, L=2,5mm, SKF ECOTAL

Guide Ring F01 (Profile) **100 x 105 x 2,5** (d x D x L) **SKF ECOTAL** (guiding material)

Seal data sheet

Guide rings

F02

Seal housing

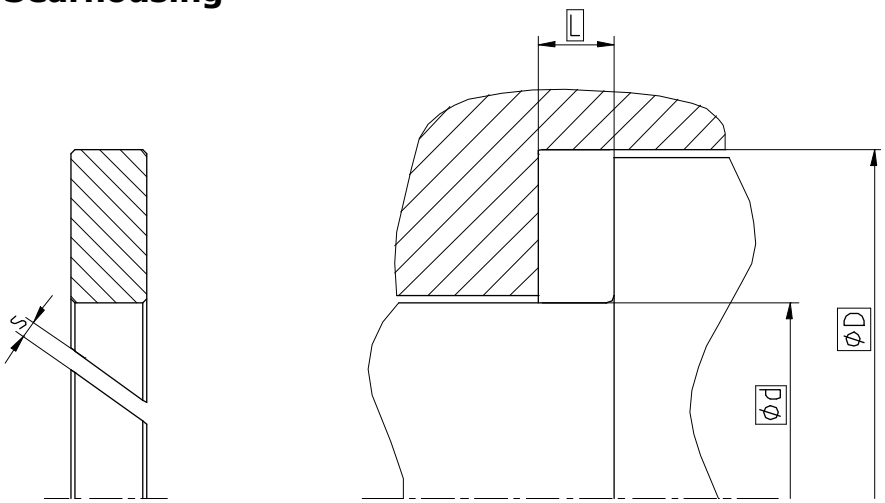

Sealing material	PU/Elastomers		PTFE	
Surface roughness	Rtmax	Ra	Rtmax	Ra
Sliding Surface	≤ 2,5 µm	0,1...0,5 µm	≤ 2 µm	0,05...0,3 µm
Bottom of groove	≤ 6,3 µm	≤ 1,6 µm	≤ 6,3 µm	≤ 1,6 µm
Groove face	≤ 15 µm	≤ 3 µm	≤ 15 µm	≤ 3 µm

Ordering dimensions...☐

Bearing area: 50...95% and a cutting depth of 0,5xRz based on Cref = 0%

Standard dimensions

minimum nominal inside diameter Ød ≥ 3mm
This is not a standard profile and serves as a replacement for an existing installation space. New constructions should use standard profiles.

Operating parameters

Guiding material	Temperature	max. speed	Specific load[2]
SKF ECOFLON 2	-200 °C...+200 °C	4 m/s	3,0 N/mm²
SKF ECOFLON 3	-200 °C...+200 °C	5 m/s	4,5 N/mm²
SKF ECOFLON 60% Bz.	-200 °C...+200 °C	5 m/s	7,5 N/mm²
SKF ECOTAL	**-50 °C...+100 °C**	**4 m/s**	**25 N/mm²**
SKF ECOMID	-40 °C...+100 °C	4 m/s	25 N/mm²
SKF ECOTEX	-40 °C...+130 °C	4 m/s	90 N/mm²

The stated operation conditions represent general indications. It is recommended not to use all maximum values simultaneously. Surface speed limits apply only to the presence of adequate lubrication film.
[1] ≤ Ø260mm: SKF ECOTAL ; > Ø260mm: SKF ECOMID
[2] Depending on temperature and allowed compression. Detailed information see profile description.

Ordering example

F02, d=100mm, D=105mm, L=2,5mm, SKF ECOTAL

Guide Ring F02	**100 x 105 x 2,5**	**SKF ECOTAL**
Profile	d x D x L	Guiding material

Seal data sheet

Guide rings

F03

Seal housing

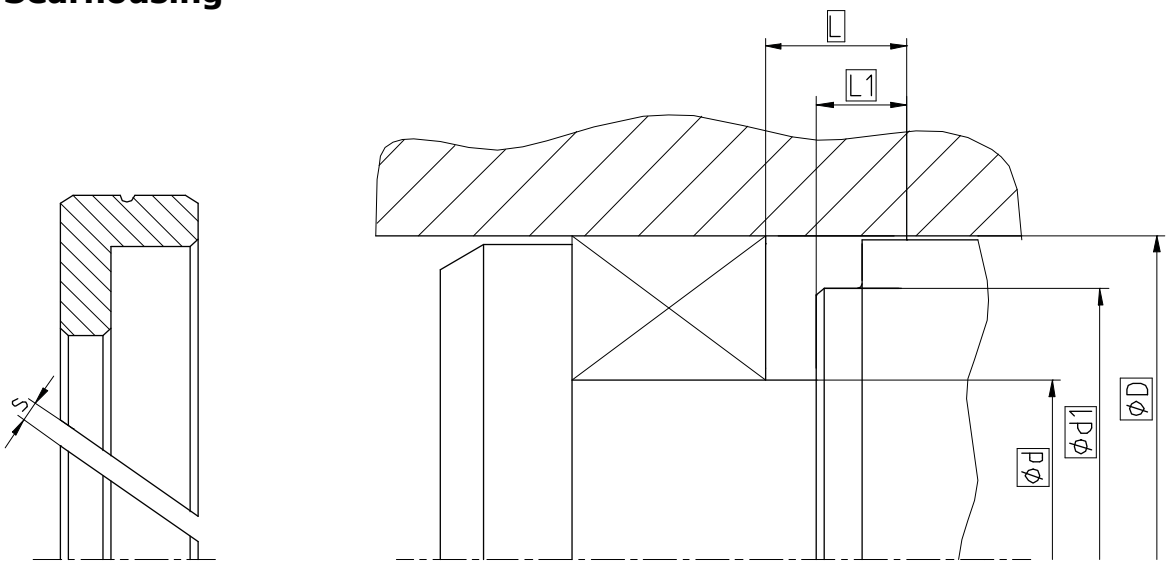

Sealing material	PU/Elastomers		PTFE	
Surface roughness	Rtmax	Ra	Rtmax	Ra
Sliding Surface	≤ 2,5 µm	0,1...0,5 µm	≤ 2 µm	0,05...0,3 µm
Bottom of groove	≤ 6,3 µm	≤ 1,6 µm	≤ 6,3 µm	≤ 1,6 µm
Groove face	≤ 15 µm	≤ 3 µm	≤ 15 µm	≤ 3 µm

Ordering dimensions...☐

Bearing area: 50...95% and a cutting depth of 0,5xRz based on Cref = 0%

Standard dimensions

ØD H9	**Ød**[1] h10	**Ød1** h8	**L** +0,2	**L1** +0,2
≥ 20 ... < 50	D - 10	D - 3	6,5	4
≥ 50 ... < 80	D - 15	D - 4	8	4
≥ 80 ... < 150	D - 20	D - 5	10,5	5,5
≥ 150 ... ≤ 400	D - 25	D - 6	13,4	7
> 400 ... ≤ 750	D - 30	D - 8	14,2	7
> 750	D - 40		15	7

Basic version: with a cutting gap s > 0 allow no supporting function. For supporting function a cutting gap s=0 and a spiral groove is used.

[1] Cross section usually depends on the seal profile.
cutting gap s : values depend on material and temperature. For detailed information please refer to the profile description.

Operating parameters

Guiding material	Temperature	max. speed	Specific load[2]
SKF ECOFLON 2	-200 °C...+200 °C	4 m/s	3,0 N/mm²
SKF ECOFLON 3	-200 °C...+200 °C	5 m/s	4,5 N/mm²
SKF ECOFLON 60% Bz.	-200 °C...+200 °C	5 m/s	7,5 N/mm²
SKF ECOTAL	**-50 °C...+100 °C**	**4 m/s**	**25 N/mm²**
SKF ECOMID	-40 °C...+100 °C	4 m/s	25 N/mm²
SKF ECOTEX	-40 °C...+130 °C	4 m/s	90 N/mm²

The stated operation conditions represent general indications. It is recommended not to use all maximum values simultaneously. Surface speed limits apply only to the presence of adequate lubrication film.

[1] ≤ Ø260mm: SKF ECOTAL ; > Ø260mm: SKF ECOMID

[2] Depending on temperature and allowed compression. Detailed information see profile description.

Ordering example

F03, D=100mm, d=80mm, d1=95mm, L=10,5mm L1=5,5mm, SKF ECOTAL

Guide Ring F03 (Profile) **100 x 80/95 x 10,5/5,5** (D x d/d1 x L/L1) **SKF ECOTAL** (Guiding material)

Seal data sheet

Guide rings

F04

Seal housing

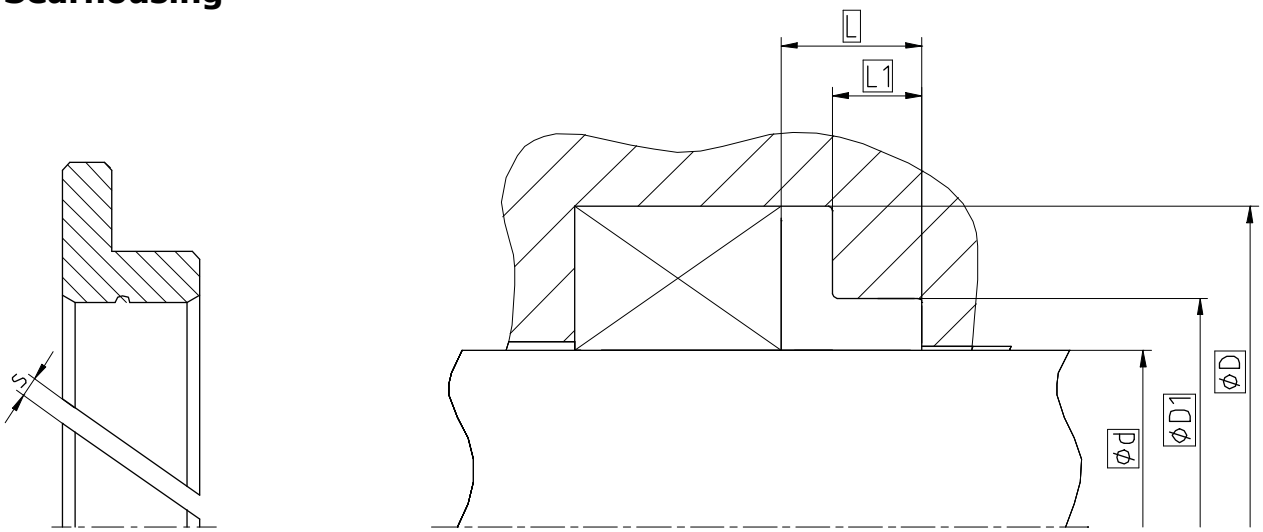

Sealing material	PU/Elastomers		PTFE	
Surface roughness	Rtmax	Ra	Rtmax	Ra
Sliding Surface	≤ 2,5 µm	0,1...0,5 µm	≤ 2 µm	0,05...0,3 µm
Bottom of groove	≤ 6,3 µm	≤ 1,6 µm	≤ 6,3 µm	≤ 1,6 µm
Groove face	≤ 15 µm	≤ 3 µm	≤ 15 µm	≤ 3 µm

Ordering dimensions...☐

Bearing area: 50...95% and a cutting depth of 0,5xRz based on Cref = 0%

Standard dimensions

Ød f8	**ØD**[1] H10	**ØD1** H8	**L** +0,2	**L1** +0,2
≥ 4 ... < 50	d +10	d + 3	6,5	4
≥ 50 ... < 80	d +15	d + 4	8	4
≥ 80 ... < 150	d +20	d + 5	10,5	5,5
≥ 150 ... ≤ 400	d +25	d + 6	13,4	7
> 400 ... ≤ 750	d +30	d + 8	14,2	7
> 750	d +40		15	7

Basic version: with a cutting gap s > 0 allow no supporting function. For supporting function a cutting gap s=0 and a spiral groove is used.

[1] Cross section usually depends on the seal profile.
cutting gap s : values depend on material and temperature. For detailed information please refer to the profile description.

Operating parameters

Guiding material	Temperature	max. speed	Specific load[2]
SKF ECOFLON 2	-200 °C...+200 °C	4 m/s	3,0 N/mm²
SKF ECOFLON 3	-200 °C...+200 °C	5 m/s	4,5 N/mm²
SKF ECOFLON 60% Bz.	-200 °C...+200 °C	5 m/s	7,5 N/mm²
SKF ECOTAL	**-50 °C...+100 °C**	**4 m/s**	**25 N/mm²**
SKF ECOMID	-40 °C...+100 °C	4 m/s	25 N/mm²
SKF ECOTEX	-40 °C...+130 °C	4 m/s	90 N/mm²

The stated operation conditions represent general indications. It is recommended not to use all maximum values simultaneously. Surface speed limits apply only to the presence of adequate lubrication film.

[1] ≤ Ø260mm: SKF ECOTAL ; > Ø260mm: SKF ECOMID

[2] Depending on temperature and allowed compression. Detailed information see profile description.

Ordering example

F04, d=100mm, D=80mm, D1=95mm, L=10,5mm L1=5,5mm, SKF ECOTAL

Guide Ring F04 (Profile) **100 x 80/95 x 10,5/5,5** (d x D/D1 x L/L1) **SKF ECOTAL** (Guiding material)

Seal data sheet

Guide rings

F05

Seal housing

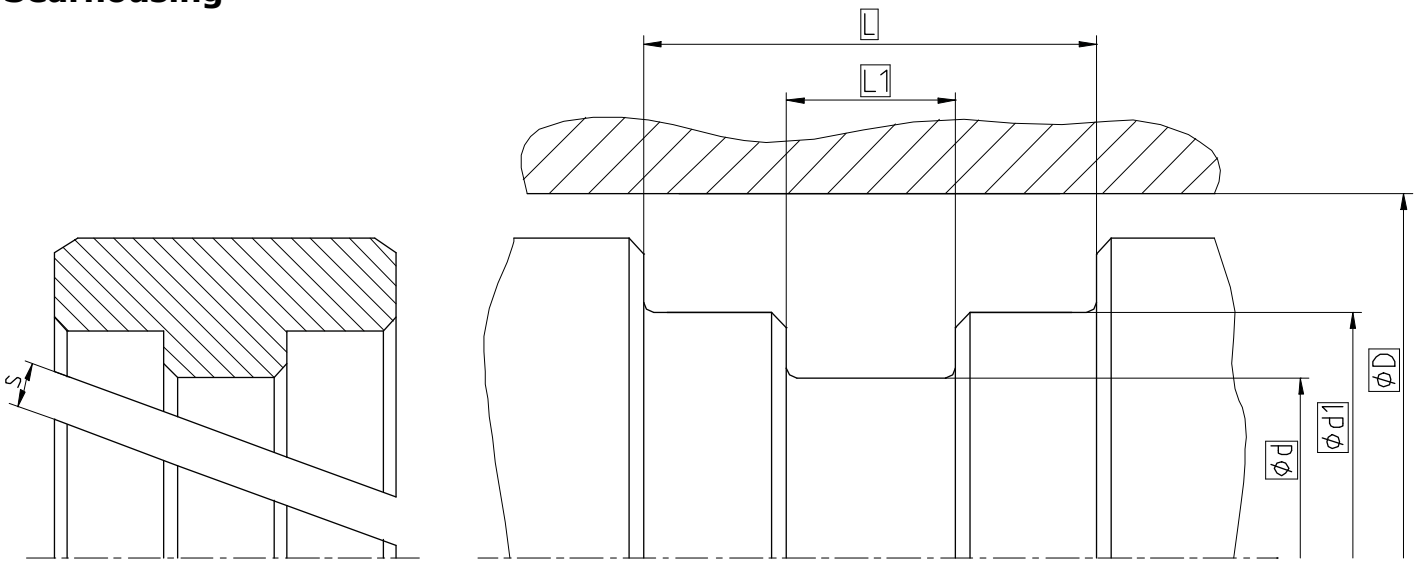

Sealing material	PU/Elastomers		PTFE	
Surface roughness	Rtmax	Ra	Rtmax	Ra
Sliding Surface	≤ 2,5 µm	0,1...0,5 µm	≤ 2 µm	0,05...0,3 µm
Bottom of groove	≤ 6,3 µm	≤ 1,6 µm	≤ 6,3 µm	≤ 1,6 µm
Groove face	≤ 15 µm	≤ 3 µm	≤ 15 µm	≤ 3 µm

Ordering dimensions...☐

Bearing area: 50...95% and a cutting depth of 0,5xRz based on Cref = 0%

Standard dimensions

ØD H9	**Ød** h10	**Ød1** h8	**Ød2**	**L** +0,2	**L1** +0,2
≥ 28 ... ≤ 36	D - 6	D - 2,8	D - 0,35	8,5	3
> 36 ... ≤ 60	D - 7,5	D - 3,2	D - 0,4	10,5	3,5
> 60 ... ≤ 90	D - 9	D - 3,5	D - 0,5	15	5
> 90 ... ≤ 150			D - 0,6		
> 150 ... ≤ 200	D - 16	D - 7,1	D - 0,7	20,3	8
> 200	D - 17	D - 7,5	D - 0,8	25	

* cutting gap s : values depend on material and temperature. For detailed information please refer to the profile description.

Operating parameters

Guiding material	Temperature	max. speed	Specific load[2]
SKF ECOFLON 2	-200 °C...+200 °C	4 m/s	3,0 N/mm²
SKF ECOFLON 3	-200 °C...+200 °C	5 m/s	4,5 N/mm²
SKF ECOFLON 60% Bz.	-200 °C...+200 °C	5 m/s	7,5 N/mm²
SKF ECOTAL	**-50 °C...+100 °C**	**4 m/s**	**25 N/mm²**
SKF ECOMID	-40 °C...+100 °C	4 m/s	25 N/mm²
SKF ECOTEX	-40 °C...+130 °C	4 m/s	90 N/mm²

The stated operation conditions represent general indications. It is recommended not to use all maximum values simultaneously. Surface speed limits apply only to the presence of adequate lubrication film.

[1] ≤ Ø260mm: SKF ECOTAL ; > Ø260mm: SKF ECOMID

[2] Depending on temperature and allowed compression. Detailed information see profile description.

Ordering example

F05, D=100mm, d=91mm, d1=96,5mm, L=15mm, L1=5mm, SKF ECOTAL

Guide Ring F05	**100 x 91/96,5 x 15/5**	**SKF ECOTAL**
Profile	D x d/d1 x L/L1	Guiding material

Seal data sheet

Guide rings

F06

Seal housing

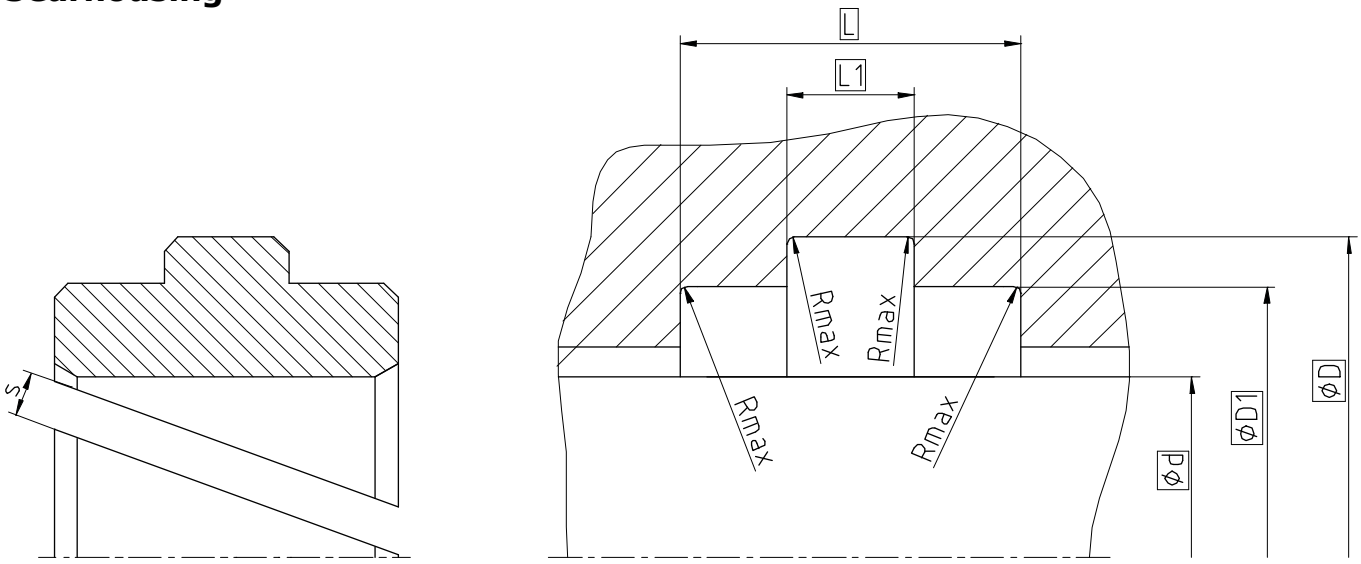

Sealing material	PU/Elastomers		PTFE	
Surface roughness	Rtmax	Ra	Rtmax	Ra
Sliding Surface	≤ 2,5 µm	0,1...0,5 µm	≤ 2 µm	0,05...0,3 µm
Bottom of groove	≤ 6,3 µm	≤ 1,6 µm	≤ 6,3 µm	≤ 1,6 µm
Groove face	≤ 15 µm	≤ 3 µm	≤ 15 µm	≤ 3 µm

Ordering dimensions...☐

Bearing area: 50...95% and a cutting depth of 0,5xRz based on Cref = 0%

Standard dimensions

Ød f8	**ØD** H10	**ØD1** H8	**ØD2**	**L** +0,2	**L1** +0,2
≥ 5 ... ≤ 36	d + 6	d + 2,8	d + 0,35	8,5	3
> 36 ... ≤ 60	d + 7,5	d + 3,2	d + 0,4	10,5	3,5
> 60 ... ≤ 90	d + 9	d + 3,5	d + 0,5	15	5
> 90 ... ≤ 150			d + 0,6		
> 150 ... ≤ 200	d + 16	d + 7,1	d + 0,7	20,3	8
> 200	d + 17	d + 7,5	d + 0,8	25	

* cutting gap s : values depend on material and temperature. For detailed information please refer to the profile description.

Operating parameters

Guiding material	Temperature	max. speed	Specific load[2]
SKF ECOFLON 2	-200 °C...+200 °C	4 m/s	3,0 N/mm²
SKF ECOFLON 3	-200 °C...+200 °C	5 m/s	4,5 N/mm²
SKF ECOFLON 60% Bz.	-200 °C...+200 °C	5 m/s	7,5 N/mm²
SKF ECOTAL	**-50 °C...+100 °C**	**4 m/s**	**25 N/mm²**
SKF ECOMID	-40 °C...+100 °C	4 m/s	25 N/mm²
SKF ECOTEX	-40 °C...+130 °C	4 m/s	90 N/mm²

The stated operation conditions represent general indications. It is recommended not to use all maximum values simultaneously. Surface speed limits apply only to the presence of adequate lubrication film.

[1] ≤ Ø260mm: SKF ECOTAL ; > Ø260mm: SKF ECOMID

[2] Depending on temperature and allowed compression. Detailed information see profile description.

Ordering example

F06, d=100mm, D=109mm, D1=103,5, L=15mm, L1=5mm, SKF ECOTAL

Guide Ring F06 (Profile) **100 x 109/103,5 x 15/5** (d x D/D1 x L/L1) **SKF ECOTAL** (Guiding material)

Seal data sheet

Guide rings

F07

Seal housing

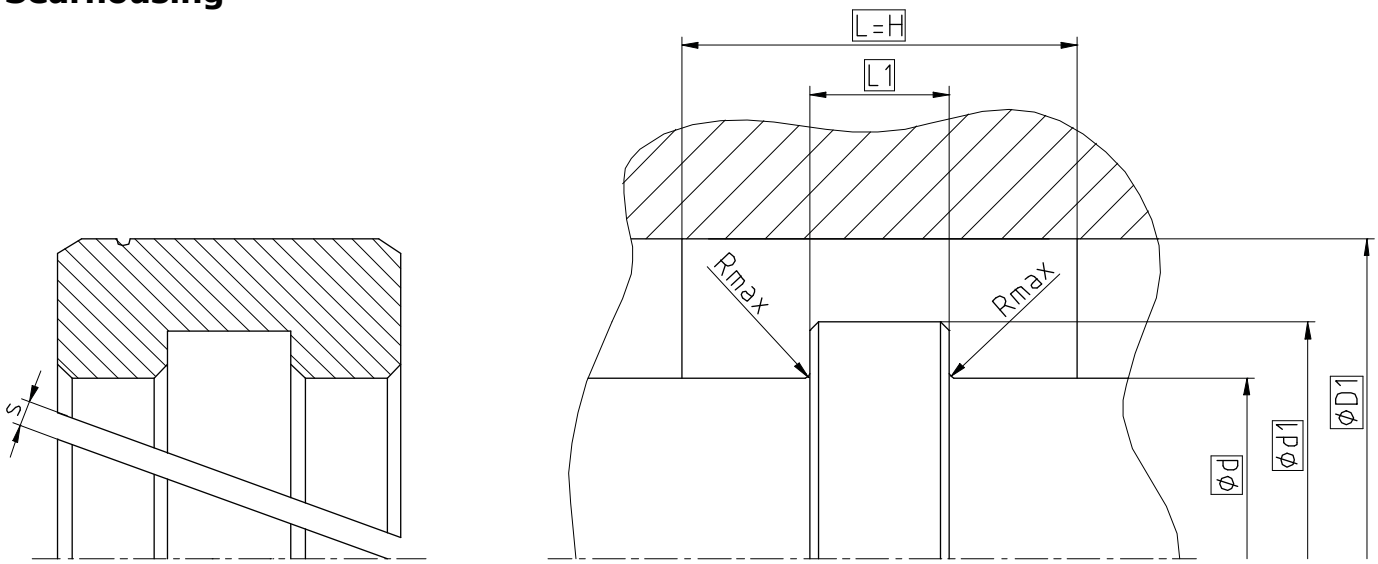

Sealing material	PU/Elastomers		PTFE	
Surface roughness	Rtmax	Ra	Rtmax	Ra
Sliding Surface	≤ 2,5 µm	0,1...0,5 µm	≤ 2 µm	0,05...0,3 µm
Bottom of groove	≤ 6,3 µm	≤ 1,6 µm	≤ 6,3 µm	≤ 1,6 µm
Groove face	≤ 15 µm	≤ 3 µm	≤ 15 µm	≤ 3 µm

Ordering dimensions...☐

Bearing area: 50...95% and a cutting depth of 0,5xRz based on Cref = 0%

Standard dimensions

minimum nominal inside diameter Ød ≥ 22mm
Depending on the application, the geometry of the guide element should be adapted to the type of application (please refer to the profile description - Seal housing). Because uncut versions would be pointless for assembly reasons, rotating applications should to be avoided. Standard version with cutting gap s > 0 do not allow a supporting function. For a supporting function a cutting gap of s=0 and a spiral groove is provided. cutting gap s: values depend on material and temperature. For detailed information please refer to the profile description.

Operating parameters

Guiding material	Temperature	max. speed	Specific load[2]
SKF ECOFLON 2	-200 °C...+200 °C	4 m/s	3,0 N/mm²
SKF ECOFLON 3	-200 °C...+200 °C	5 m/s	4,5 N/mm²
SKF ECOFLON 60% Bz.	-200 °C...+200 °C	5 m/s	7,5 N/mm²
SKF ECOTAL	**-50 °C...+100 °C**	**4 m/s**	**25 N/mm²**
SKF ECOMID[1]	-40 °C...+100 °C	4 m/s	25 N/mm²
SKF ECOTEX	-40 °C...+130 °C	4 m/s	90 N/mm²

The stated operation conditions represent general indications. It is recommended not to use all maximum values simultaneously. Surface speed limits apply only to the presence of adequate lubrication film.
[1] ≤ Ø260mm: SKF ECOTAL ; > Ø260mm: SKF ECOMID
[2] Depending on temperature and allowed compression. Detailed information see profile description.

Ordering example

F07, D=100mm, d=91mm, d1=96,5mm, L=15mm, L1=5mm, SKF ECOTAL

Guide Ring F07	**100 x 91/96,5 x 15/5**	**SKF ECOTAL**
Profile	D x d/d1 x L/L1	Guiding material

Seal data sheet

Guide rings

F08

Seal housing

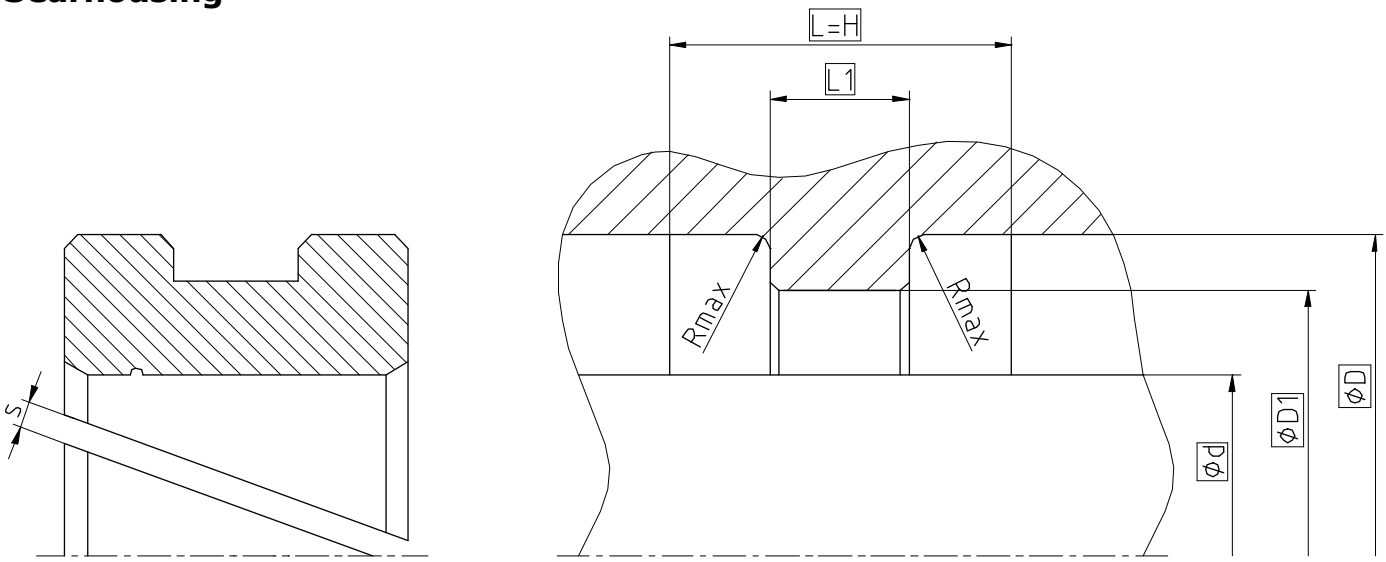

Sealing material	PU/Elastomers		PTFE	
Surface roughness	Rtmax	Ra	Rtmax	Ra
Sliding Surface	≤ 2,5 µm	0,1...0,5 µm	≤ 2 µm	0,05...0,3 µm
Bottom of groove	≤ 6,3 µm	≤ 1,6 µm	≤ 6,3 µm	≤ 1,6 µm
Groove face	≤ 15 µm	≤ 3 µm	≤ 15 µm	≤ 3 µm

Ordering dimensions...☐

Bearing area: 50...95% and a cutting depth of 0,5xRz based on Cref = 0%

Standard dimensions

minimum nominal inside diameter Ød ≥ 22mm
Depending on the application, the geometry of the guide element should be adapted to the type of application (please refer to the profile description - Seal housing). Because uncut versions would be pointless for assembly reasons, rotating applications should to be avoided. Standard version with cutting gap s > 0 do not allow a supporting function. For a supporting function a cutting gap of s=0 and a spiral groove is provided. cutting gap s: values depend on material and temperature. For detailed information please refer to the profile description.

Operating parameters

Guiding material	Temperature	max. speed	Specific load[2]
SKF ECOFLON 2	-200 °C...+200 °C	4 m/s	3,0 N/mm²
SKF ECOFLON 3	-200 °C...+200 °C	5 m/s	4,5 N/mm²
SKF ECOFLON 60% Bz.	-200 °C...+200 °C	5 m/s	7,5 N/mm²
SKF ECOTAL	**-50 °C...+100 °C**	**4 m/s**	**25 N/mm²**
SKF ECOMID[1]	-40 °C...+100 °C	4 m/s	25 N/mm²
SKF ECOTEX	-40 °C...+130 °C	4 m/s	90 N/mm²

The stated operation conditions represent general indications. It is recommended not to use all maximum values simultaneously. Surface speed limits apply only to the presence of adequate lubrication film.
[1] ≤ Ø260mm: SKF ECOTAL ; > Ø260mm: SKF ECOMID
[2] Depending on temperature and allowed compression. Detailed information see profile description.

Ordering example

F08, d=100mm, D=109mm, D1=103,5, L=15mm, L1=5mm, SKF ECOTAL

Guide Ring F08	**100 x 109/103,5 x 15/5**	**SKF ECOTAL**
Profile	d x D/D1 x L/L1	Guiding material

TOP OSA

TIIVISTÄVÄ TEKIJÄ

Backup Elements

Backup Elements

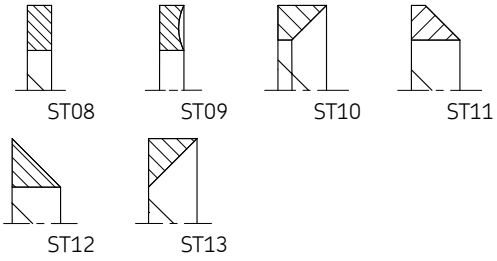

Seal data sheet

Backup rings

ST08

Seal housing

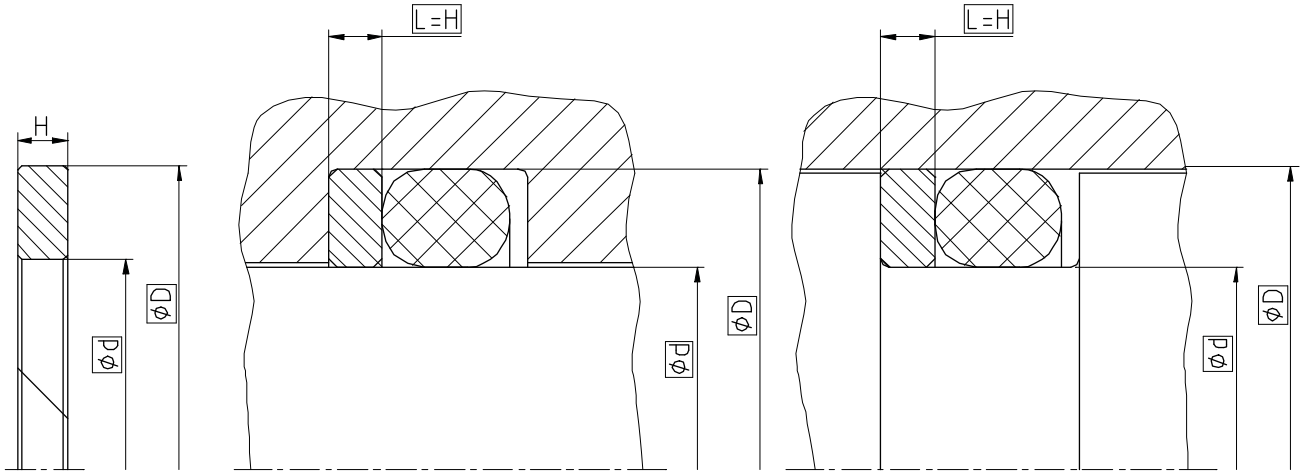

Sealing material	PU/Elastomers		PTFE	
Surface roughness	Rtmax	Ra	Rtmax	Ra
Sliding Surface	≤ 2,5 µm	0,1...0,5 µm	≤ 2 µm	0,05...0,3 µm
Bottom of groove	≤ 6,3 µm	≤ 1,6 µm	≤ 6,3 µm	≤ 1,6 µm
Groove face	≤ 15 µm	≤ 3 µm	≤ 15 µm	≤ 3 µm

Ordering dimensions...□

Bearing area: 50...95% and a cutting depth of 0,5xRz based on Cref = 0%

Standard dimensions

minimum nominal inside diameter Ød ≥ 4,5mm
Profile size, surface data and tolerances are the result of a combination of the relevant application specific sealing material. Standard version: cutting gap 0. cut 45°

Operating parameters

Backup material	Temperature
ECOPUR®	-30 °C...+110 °C
H-ECOPUR™	-20 °C...+110 °C
T-ECOPUR™	-50 °C...+110 °C
G-ECOPUR™	-30 °C...+110 °C
X-ECOPUR™	-30 °C...+110 °C
XH-ECOPUR™	-20 °C...+110 °C
XS-ECOPUR™	-20 °C...+110 °C
G-ECOPUR 54D™	-30 °C...+110 °C
SKF ECOFLON 1	-200 °C...+260 °C
SKF ECOFLON 2	-200 °C...+260 °C
SKF ECOTAL	**-50 °C...+100 °C**
SKF ECOMID	-40 °C...+100 °C
SKF ECOPAEK	-60 °C...+260 °C

The stated operation conditions represent general indications. It is recommended not to use all maximum values simultaneously. Surface speed limits apply only to the presence of adequate lubrication film.

Ordering example

ST08, d=100mm, D=120mm, L=13mm, SKF ECOTAL

Backup ring ST08	**100 x 120 x 13**	**SKF ECOTAL**
Profile	d x D x L	Backup ring

Seal data sheet

Backup rings

ST09

Seal housing

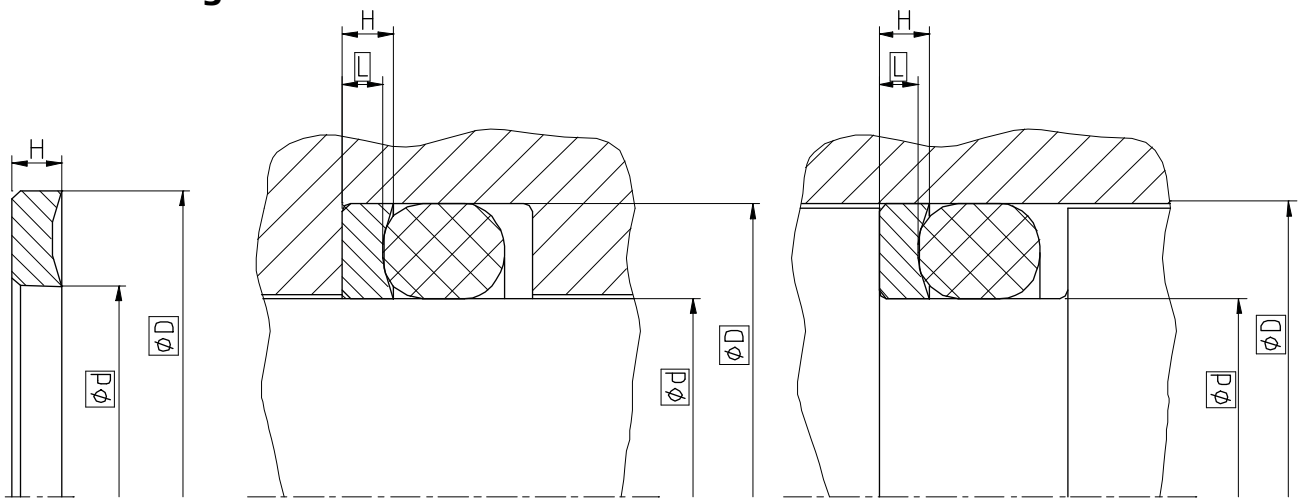

Sealing material	PU/Elastomers		PTFE	
Surface roughness	Rtmax	Ra	Rtmax	Ra
Sliding Surface	≤ 2,5 µm	0,1...0,5 µm	≤ 2 µm	0,05...0,3 µm
Bottom of groove	≤ 6,3 µm	≤ 1,6 µm	≤ 6,3 µm	≤ 1,6 µm
Groove face	≤ 15 µm	≤ 3 µm	≤ 15 µm	≤ 3 µm

Ordering dimensions...☐

Bearing area: 50...95% and a cutting depth of 0,5xRz based on Cref = 0%

Standard dimensions

minimum nominal inside diameter Ød ≥ 4,5mm
Profile size, surface data and tolerances are the result of a combination of the relevant application specific sealing material. Standard version: uncut

Operating parameters

Backup material	Temperature
ECOPUR®	-30 °C...+110 °C
H-ECOPUR™	-20 °C...+110 °C
T-ECOPUR™	-50 °C...+110 °C
G-ECOPUR™	-30 °C...+110 °C
X-ECOPUR™	**-30 °C...+110 °C**
XS-ECOPUR™	-20 °C...+110 °C
XH-ECOPUR™	-20 °C...+110 °C
G-ECOPUR 54D™	-30 °C...+110 °C
SKF ECOFLON 1	-200 °C...+260 °C
SKF ECOFLON 2	-200 °C...+260 °C

The stated operation conditions represent general indications. It is recommended not to use all maximum values simultaneously. Surface speed limits apply only to the presence of adequate lubrication film.

Ordering example

ST09, d=100mm, D=120mm, L=13mm, X-ECOPUR

Backup ring ST09	**100 x 120 x 13**	**X-ECOPUR**
Profile	d x D x L	Backup ring

Seal data sheet

Backup rings

ST10

Seal housing

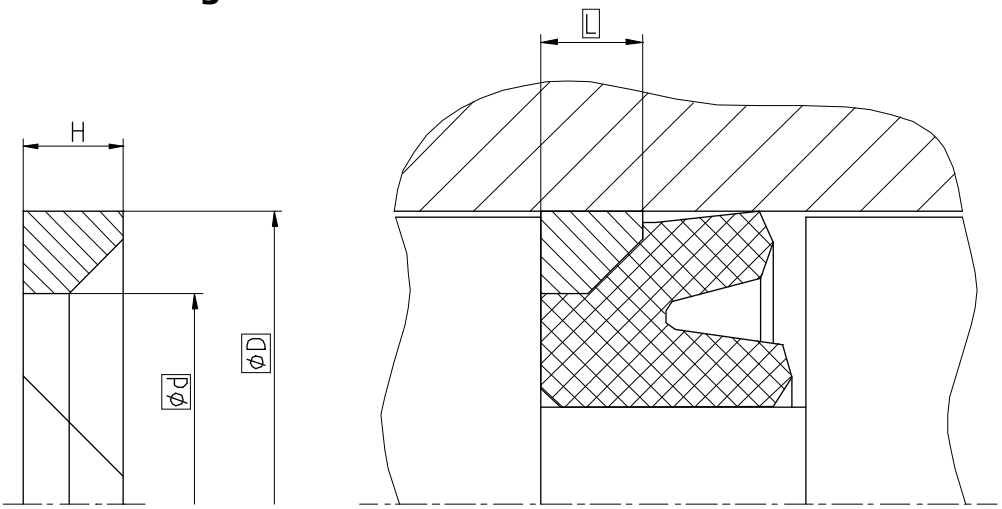

Sealing material	PU/Elastomers		PTFE	
Surface roughness	Rtmax	Ra	Rtmax	Ra
Sliding Surface	≤ 2,5 µm	0,1...0,5 µm	≤ 2 µm	0,05...0,3 µm
Bottom of groove	≤ 6,3 µm	≤ 1,6 µm	≤ 6,3 µm	≤ 1,6 µm
Groove face	≤ 15 µm	≤ 3 µm	≤ 15 µm	≤ 3 µm

Ordering dimensions...□

Bearing area: 50...95% and a cutting depth of 0,5xRz based on Cref = 0%

Standard dimensions

minimum nominal inside diameter Ød ≥ 4,5mm
Profile size, surface data and tolerances are the result of a combination of the relevant application specific sealing material. Standard version: cutting gap 0. cut 45°

Operating parameters

Backup material	Temperature
SKF ECOTAL	**-50 °C...+100 °C**
SKF ECOFLON 2	-200 °C...+260 °C
SKF ECOMID	-40 °C...+100 °C
SKF ECOPAEK	-60 °C...+260 °C

The stated operation conditions represent general indications. It is recommended not to use all maximum values simultaneously. Surface speed limits apply only to the presence of adequate lubrication film.

Ordering example

ST10, D=100mm, d=85mm, L=10mm, SKF ECOTAL

Backup ring ST10	**100 x 85 x 10**	**SKF ECOTAL**
Profile	D x d x L	Backup ring

Seal data sheet

ST11

Backup rings

Seal housing

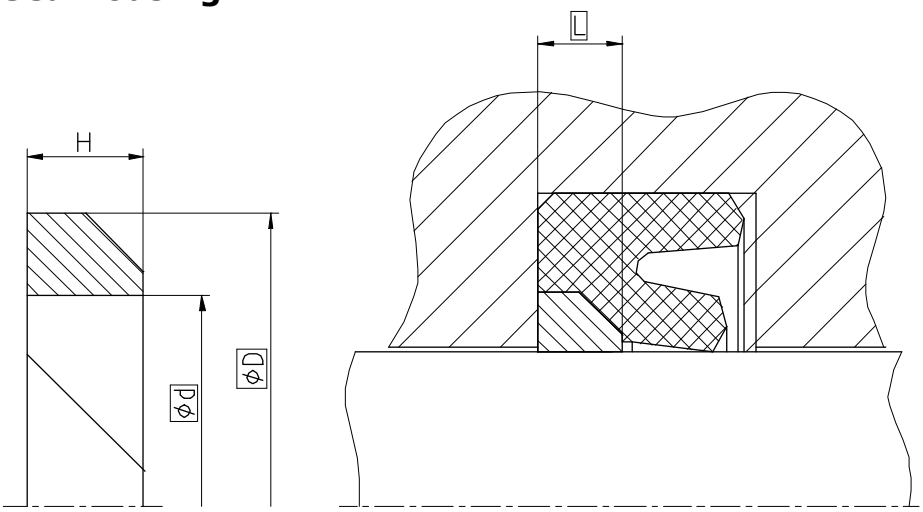

Sealing material	PU/Elastomers		PTFE	
Surface roughness	Rtmax	Ra	Rtmax	Ra
Sliding Surface	≤ 2,5 µm	0,1...0,5 µm	≤ 2 µm	0,05...0,3 µm
Bottom of groove	≤ 6,3 µm	≤ 1,6 µm	≤ 6,3 µm	≤ 1,6 µm
Groove face	≤ 15 µm	≤ 3 µm	≤ 15 µm	≤ 3 µm

Ordering dimensions...☐

Bearing area: 50...95% and a cutting depth of 0,5xRz based on Cref = 0%

Standard dimensions

minimum nominal inside diameter Ød ≥ 4,5mm
Profile size, surface data and tolerances are the result of a combination of the relevant application specific sealing material. Standard version: cutting gap 0. cut 45°

Operating parameters

Backup material	Temperature
SKF ECOTAL	**-50 °C...+100 °C**
SKF ECOFLON 2	-200 °C...+260 °C
SKF ECOMID	-40 °C...+100 °C
SKF ECOPAEK	-60 °C...+260 °C

The stated operation conditions represent general indications. It is recommended not to use all maximum values simultaneously. Surface speed limits apply only to the presence of adequate lubrication film.

Ordering example

ST11, d=100mm, D=120mm, L=13mm, SKF ECOTAL

Backup ring ST11	**100 x 120 x 13**	**SKF ECOTAL**
Profile	d x D x L	Backup ring

Seal data sheet

ST12

Backup rings

Seal housing

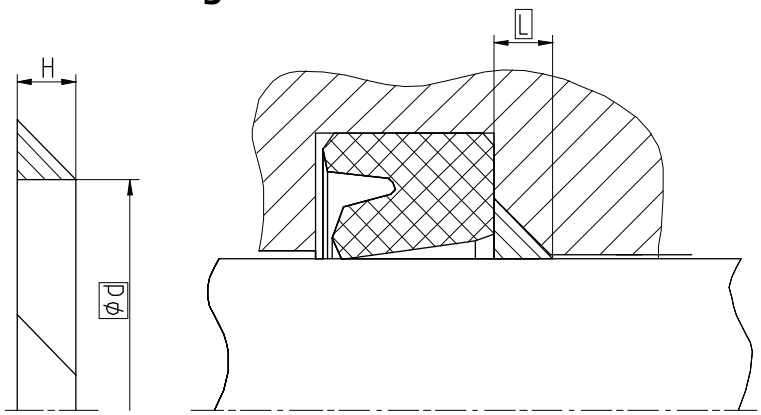

Sealing material	PU/Elastomers		PTFE	
Surface roughness	Rtmax	Ra	Rtmax	Ra
Sliding Surface	≤ 2,5 µm	0,1...0,5 µm	≤ 2 µm	0,05...0,3 µm
Bottom of groove	≤ 6,3 µm	≤ 1,6 µm	≤ 6,3 µm	≤ 1,6 µm
Groove face	≤ 15 µm	≤ 3 µm	≤ 15 µm	≤ 3 µm

Ordering dimensions...□

Bearing area: 50...95% and a cutting depth of 0,5xRz based on Cref = 0%

Standard dimensions

minimum nominal inside diameter Ød ≥ 4,5mm
Profile size, surface data and tolerances are the result of a combination of the relevant application specific sealing material. Standard version: incision gap 0. cut 45°

Operating parameters

Backup material	Temperature
SKF ECOTAL	**-50 °C...+100 °C**
SKF ECOFLON 2	-200 °C...+260 °C
SKF ECOMID	-40 °C...+100 °C
SKF ECOPAEK	-60 °C...+260 °C

The stated operation conditions represent general indications. It is recommended not to use all maximum values simultaneously. Surface speed limits apply only to the presence of adequate lubrication film.

Ordering example

ST12, d=100mm, L=13mm, SKF ECOTAL

Backup ring ST12	**100 x 13**	**SKF ECOTAL**
Profile	d x L	Backup ring

Seal data sheet

ST13

Backup rings

Seal housing

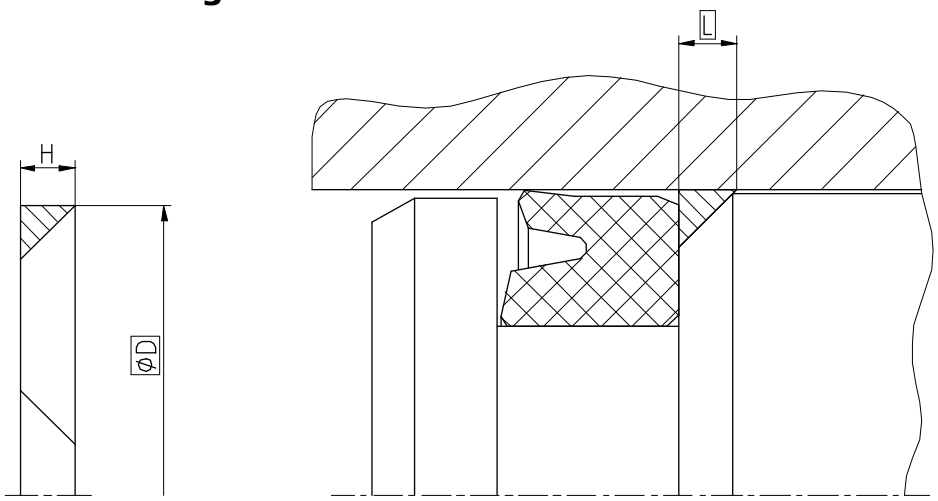

Sealing material	PU/Elastomers		PTFE	
Surface roughness	Rtmax	Ra	Rtmax	Ra
Sliding Surface	≤ 2,5 µm	0,1...0,5 µm	≤ 2 µm	0,05...0,3 µm
Bottom of groove	≤ 6,3 µm	≤ 1,6 µm	≤ 6,3 µm	≤ 1,6 µm
Groove face	≤ 15 µm	≤ 3 µm	≤ 15 µm	≤ 3 µm

Ordering dimensions...☐

Bearing area: 50...95% and a cutting depth of 0,5xRz based on Cref = 0%

Standard dimensions

minimum nominal inside diameter Ød ≥ 4,5mm
Profile size, surface data and tolerances are the result of a combination of the relevant application specific sealing material. Standard version: incision gap 0. cut 45°

Operating parameters

Backup material	Temperature
SKF ECOTAL	**-50 °C...+100 °C**
SKF ECOFLON 2	-200 °C...+260 °C
SKF ECOMID	-40 °C...+100 °C
SKF ECOPAEK	-60 °C...+260 °C

The stated operation conditions represent general indications. It is recommended not to use all maximum values simultaneously. Surface speed limits apply only to the presence of adequate lubrication film.

Ordering example

ST13, D=100mm, L=13mm, SKF ECOTAL

Backup ring ST13	**100 x 13**	**SKF ECOTAL**
Profile	D x L	Backup ring